# =MSP6040
# Automatic Splitting Machine with Saw

## -= AS BUILT =-


MAREL
Albert Schweitzerstraat 33
7131 PG Lichtenvoorde
P.O. Box 160
7130 AD Lichtenvoorde
T: +31 544-390500


Castrolanda
5080040
CASCOL
Praca dos imigrantes, no
Colonia Castrol
Brazil


Customersupport:
T: +31 544-390567
E: marelmeat.support@marel.com
marel.com


| | | | |
|---|---|---|---|
| Identification number | LE632589 | Year of Construction | 2019 |
| Supply | 380 [V] | Frequency | 60 [Hz] |
| Rated current | 45 [A] | Pre-Fusing | 50 [A] |
| Control voltage | 24 [Vdc] | Ics | 25 [kA] |
| Temperature | 10-35 [°C] | Weight (kg) | 330 [kg] |
| ID-Mark | CASCOL02 | | |

| | | | | | | | |
|---|---|---|---|---|---|---|---|
| Start | 02-08-2019 | Engineer | WTH | Castrolanda | | Frontpage | CASCOL02 |
| Change | | Revision | V2.3 | Order Number: | LE632589 | | Page: |
| Print Date | 10-10-2019 | | | Production Number: | 3765386 | Project Description: Durand MSP 6040 | =MSP6040 1 |

# Page-Index

| Group | Sub-Group | Page | Description | Revision Date |
|---|---|---|---|---|
| =MSP6040 | | 1 | Frontpage | |
| =MSP6040 | | 5 | Revision information | |
| =MSP6040 | | 35 | Wire Specifications | |
| =MSP6040 | | 41 | Layout Cable Overview | |
| =MSP6040 | | 45 | Layout Cabinet | |
| =MSP6040 | | 46 | Layout Control Panel | |
| =MSP6040 | | 51 | Layout Network | |
| =MSP6040 | | 100 | Main Current | |
| =MSP6040 | | 110 | Main Current | |
| =MSP6040 | | 120 | Control current | |
| =MSP6040 | | 210 | Emergencystop circuit 1 | |
| =MSP6040 | | 211 | Control current | |
| =MSP6040 | | 301 | Main Current Saw motor VFD | |
| =MSP6040 | | 302 | Main current Y-axis Resolver Saw side up-down motor VFD | |
| =MSP6040 | | 302.A | Control current Y-axis Resolver Saw side up-down motor VFD | |
| =MSP6040 | | 303.A | Control current Y-axis Resolver Back arm up-down motor VFD | |
| =MSP6040 | | 303 | Main current Y-axis Resolver Back arm up-down motor VFD | |
| =MSP6040 | | 304.A | Control current X axis Encoders Translation VFD | |
| =MSP6040 | | 304 | Main current X axis Encoders Translation VFD | |
| =MSP6040 | | 305 | Main current Z-axis Resolver in-out motor VFD | |
| =MSP6040 | | 305.A | Control current Z-axis Resolver in-out motor VFD | |
| =MSP6040 | | 400 | Control-voltage internal | |
| =MSP6040 | | 600 | Control current IM151-8 | |
| =MSP6040 | | 601 | ET200S Input | |
| =MSP6040 | | 602 | ET200S Input | |
| =MSP6040 | | 603 | ET200S Input | |
| =MSP6040 | | 604 | ET200S Input | |
| =MSP6040 | | 605 | ET200S Output | |
| =MSP6040 | | 606 | ET200S Output | |
| =MSP6040 | | 607 | ET200S Output | |

# Page-Index

| Group | Sub-Group | Page | Description | Revision Date |
|---|---|---|---|---|
| =MSP6040 | | 2995 | Detail brake connection Motor + SR11 | |
| =MSP6040 | | 2996 | Network connections | |
| =MSP6040 | | 2997 | Detailed drawing Frequency controller | |
| =MSP6040 | | 2998 | Encoder connection | |
| =MSP6040 | | 2999 | Detailed brake connection frequency controller | |
| =MSP6040 | | 3001 | Cable connection overview | 28-08-2019 |
| =MSP6040 | | 3002 | Cable connection overview | 28-08-2019 |
| =MSP6040 | | 3003 | Cable connection overview | 28-08-2019 |
| =MSP6040 | | 3004 | Cable connection overview | 28-08-2019 |
| =MSP6040 | | 3005 | Cable connection overview | 28-08-2019 |
| =MSP6040 | | 3006 | Cable connection overview | 28-08-2019 |
| =MSP6040 | | 3007 | Cable connection overview | 28-08-2019 |
| =MSP6040 | | 3008 | Cable connection overview | 28-08-2019 |
| =MSP6040 | | 3009 | Cable connection overview | 28-08-2019 |
| =MSP6040 | | 3010 | Cable connection overview | 28-08-2019 |
| =MSP6040 | | 3011 | Cable connection overview | 28-08-2019 |
| =MSP6040 | +BACK ARM UP/DOWN TROLLEY | 3012 | Cable connection overview | 28-08-2019 |
| =MSP6040 | +SAW UP/DOWN TROLLEY | 3013 | Cable connection overview | 28-08-2019 |
| =MSP6040 | | 4000 | List of Materials | 28-08-2019 |
| =MSP6040 | | 4001 | List of Materials | 28-08-2019 |
| =MSP6040 | | 4002 | List of Materials | 28-08-2019 |
| =MSP6040 | | 5001 | -X0 | 28-08-2019 |
| =MSP6040 | | 5002 | -X16U2 | 28-08-2019 |
| =MSP6040 | | 5003 | -X16U2.1 | 28-08-2019 |
| =MSP6040 | | 5004 | -X16U3 | 28-08-2019 |
| =MSP6040 | | 5005 | -X16U3.1 | 28-08-2019 |
| =MSP6040 | | 5006 | -X16U4.1 | 28-08-2019 |
| =MSP6040 | | 5007 | -X16U4.2 | 28-08-2019 |
| =MSP6040 | | 5008 | -X16U7.1 | 28-08-2019 |
| =MSP6040 | | 5009 | -XA10 | 28-08-2019 |

# Page-Index

| Group | Sub-Group | Page | Description | Revision Date |
|---|---|---|---|---|
| =MSP6040 | | 5010 | -XA11 | 28-08-2019 |
| =MSP6040 | | 5011 | -XA12 | 28-08-2019 |
| =MSP6040 | | 5012 | -XC5 | 28-08-2019 |
| =MSP6040 | | 5013 | -XC8 | 28-08-2019 |
| =MSP6040 | | 5014 | -XC9 | 28-08-2019 |
| =MSP6040 | | 5015 | -XES1 | 28-08-2019 |
| =MSP6040 | | 5016 | -XES2 | 28-08-2019 |
| =MSP6040 | +CP | 5017 | -XCP5 | 28-08-2019 |
| =MSP6040 | | 6000 | Cable list | 28-08-2019 |
| =MSP6040 | | 6001 | Cable list | 28-08-2019 |

Version:
0 Quotation
1 Start-up
2 As-Built
9 Service

| | Date: | Name: | Function: |
|---|---|---|---|
| | 06-08-2019 | W. ter Haar | Hardware Engineer |
| | 06-08-2019 | M. Geels | Project Engineer |
| | | | |
| | | | |

# Revision information

| Rev. | Rev. date | Engineer | Description of change | Page |
|---|---|---|---|---|
| V0.1 | 06-08-2019 | W. ter Haar | Released for quotation | 1 |
| V1.2 | 09-08-2019 | W. ter Haar | Released for construction | 1 |
| V2.3 | 19-10-2019 | W. ter Haar | As Built | 1 |

## Wire colors

| | | |
|---|---|---|
| Main-voltage | L1,L2,L3 | Black |
| Main-voltage | L1 | Brown |
| Neutral wire | MP | Blue |
| Protective Ground | GND | Yellow / Green |
| Control-voltage | 24Vdc (+ wire) | Orange |
| Control-voltage | 24Vdc (switch wire) | Pink |
| Control-voltage | 24Vdc (- wire) | Grey |
| Measuring wire | | White |
| External-voltage | | Transparent |

| Max Amp. | MM² |
|---|---|
| - | 0,5 |
| - | 0,75 |
| 0-8 | 1,0 |
| 8-12 | 1,5 |
| 12-15 | 2,5 |
| 15-20 | 2,5 |
| 20-25 | 4,0 |
| 25-32 | 6,0 |
| 32-50 | 10 |
| 50-65 | 16 |
| 65-85 | 25 |
| 85-100 | 35 |
| 100-115 | 35 |
| 115-130 | 50 |
| 130-150 | 50 |
| 150-175 | 70 |
| 175-200 | 95 |
| 200-225 | 95 |
| 225-250 | 120 |
| 250-275 | 150 |
| 275-300 | 185 |
| 300-350 | 185 |
| 350-400 | 240 |

## Terminal names

X0 = Main Power Supply
X1 = Main-voltage 3 Phases 200-690Vac
X2 = Main-voltage 1 Phase 110-240Vac
XES = Emergencystop Circuit
X5 = Control-voltage DC
X7 = Measuringcables, Thermistors
X8 = Potential free, Eternal contacts
XPB = Profibus
XPN = Profinet
XEN = Ethernet
XPCM = Telephoneconnection
X0VDC = Control-voltage 0VDC

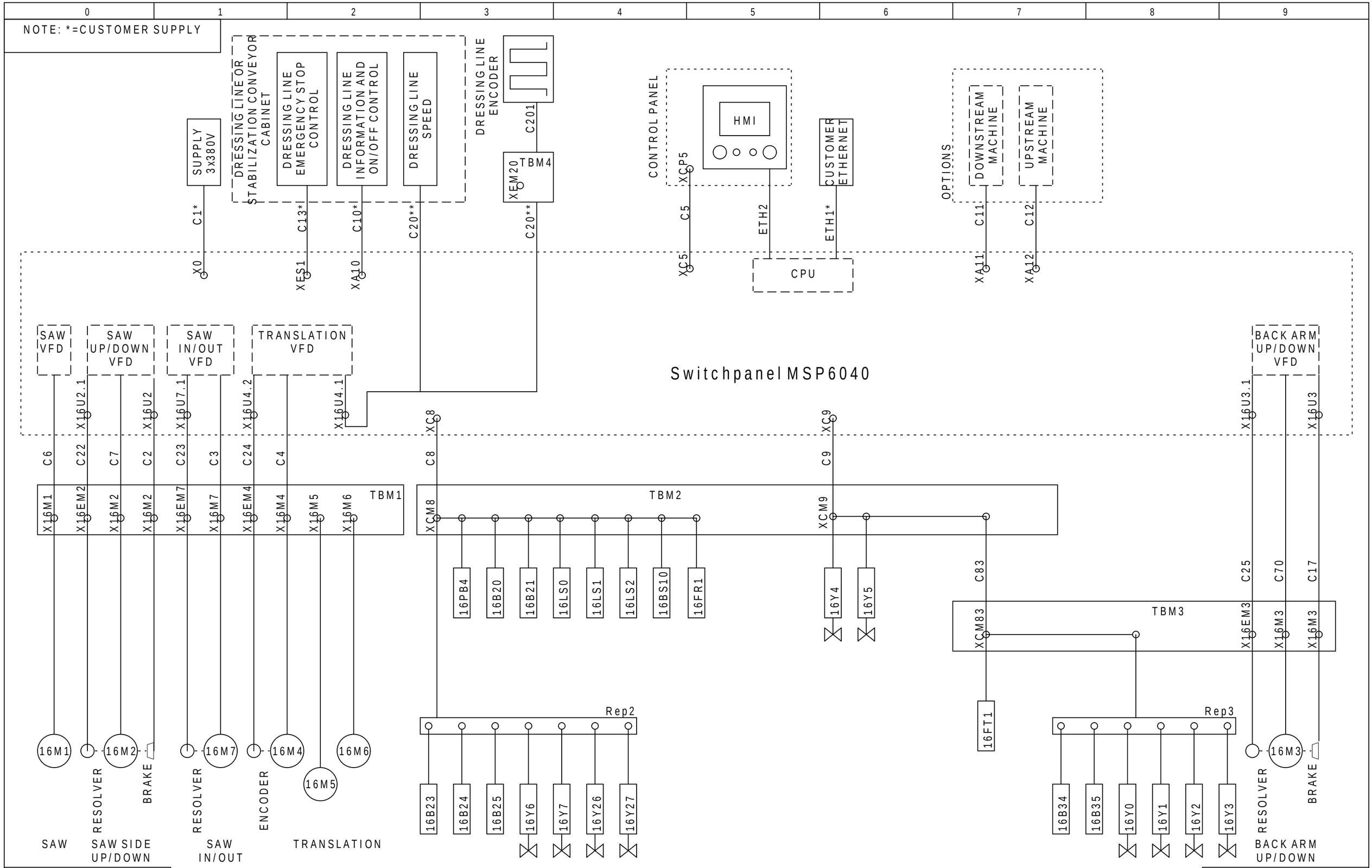


| | | | | | |
|---|---|---|---|---|---|
| Start | 02-08-2019 | Engineer | WTH | Castrolanda | |
| Change | | Revision | V2.3 | Order Number: | LE632589 |
| Print Date | 10-10-2019 | Project | | Production Number: | 3765386 |

Layout Cable Overview

Project Description: Durand MSP 6040

CASCOL02

=MSP6040

Page: 41

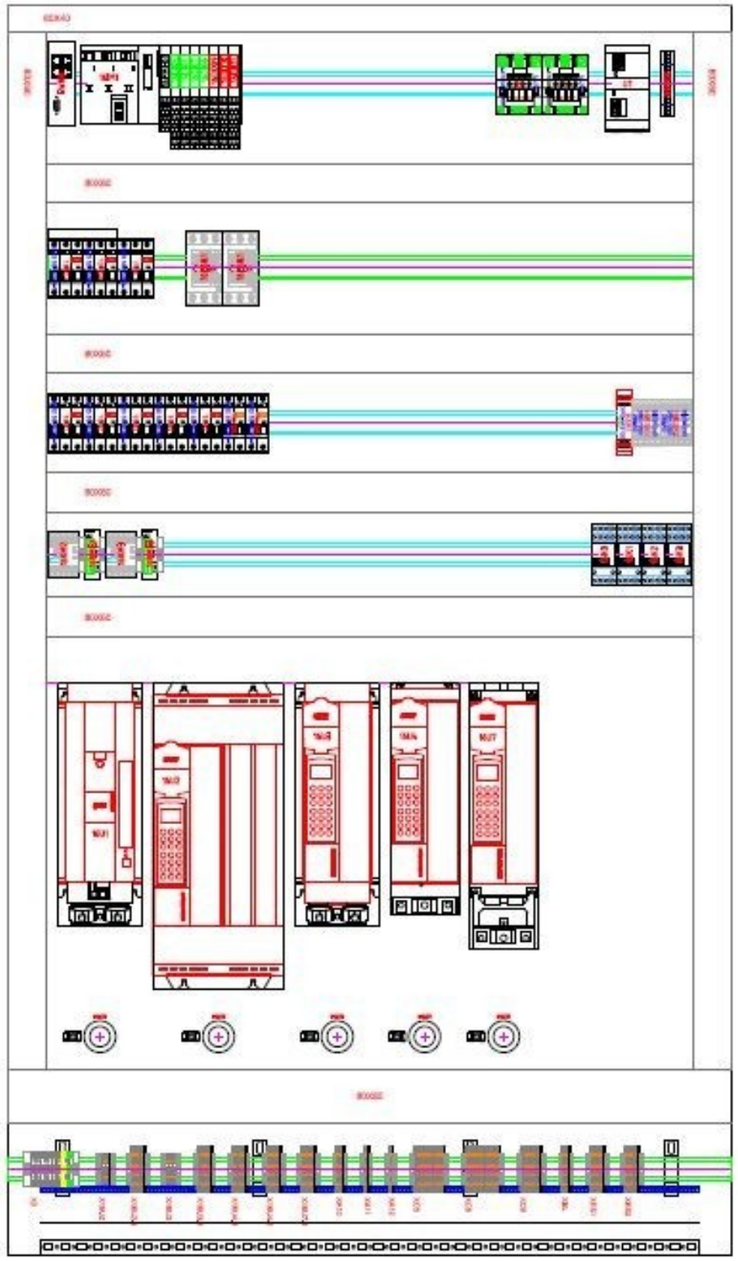

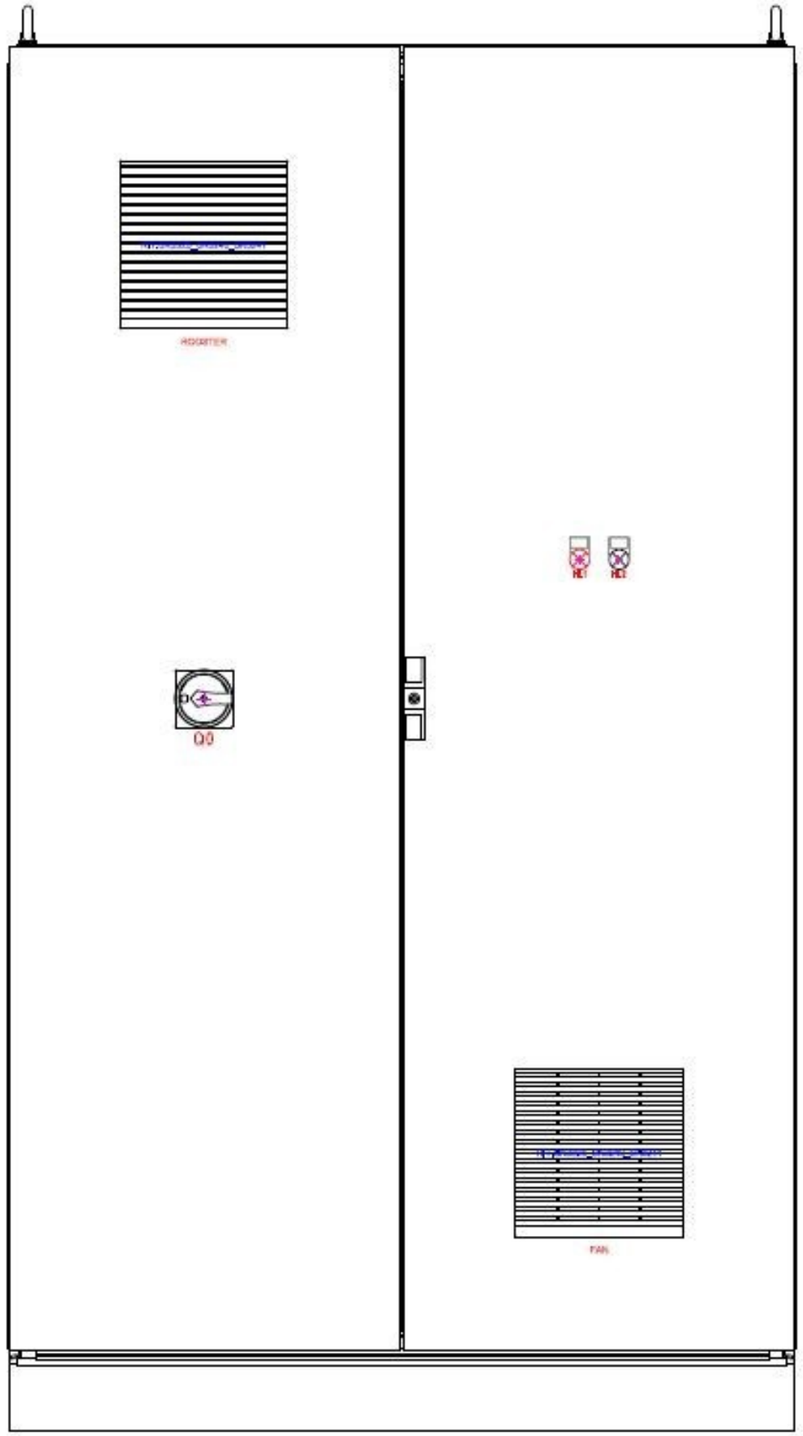

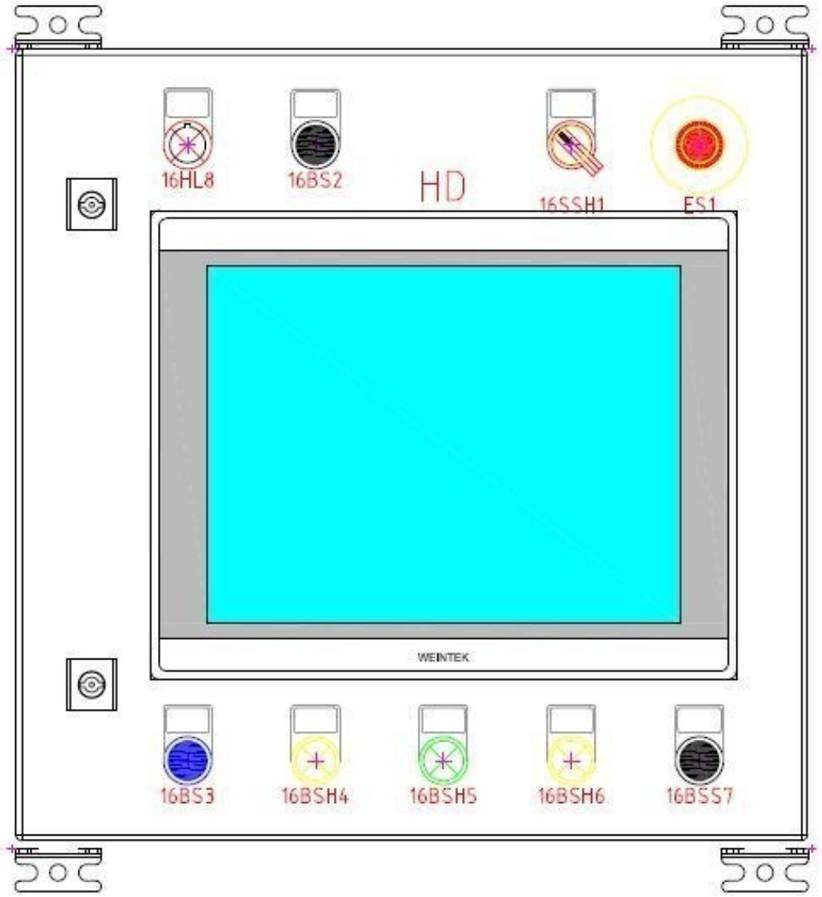
16HL8
16BS2
HD
16SSH1
ES1
WEINTEK
16BS3
16BSH4
16BSH5
16BSH6
16BSS7

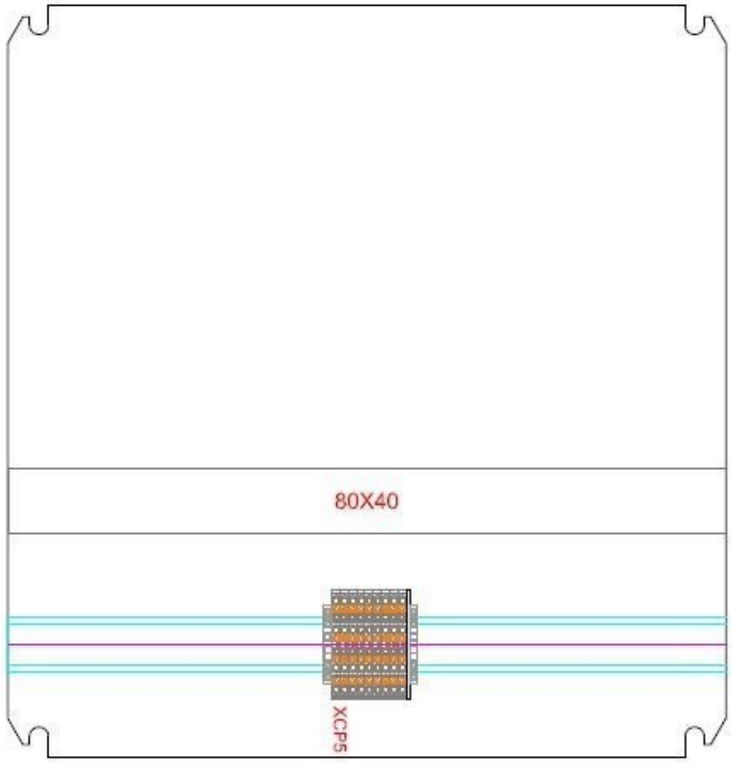
80X40
XCP5

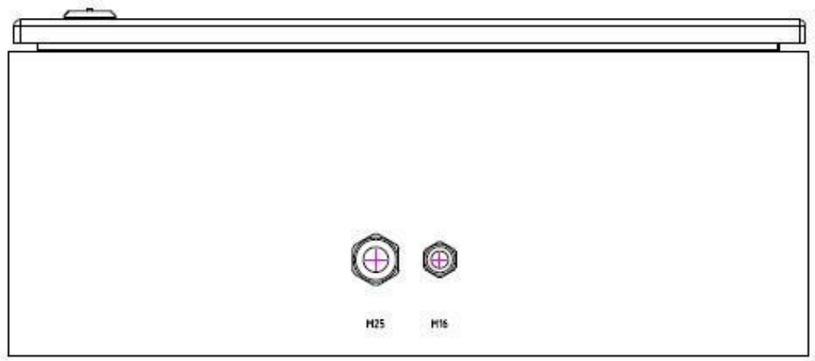
M25
M16

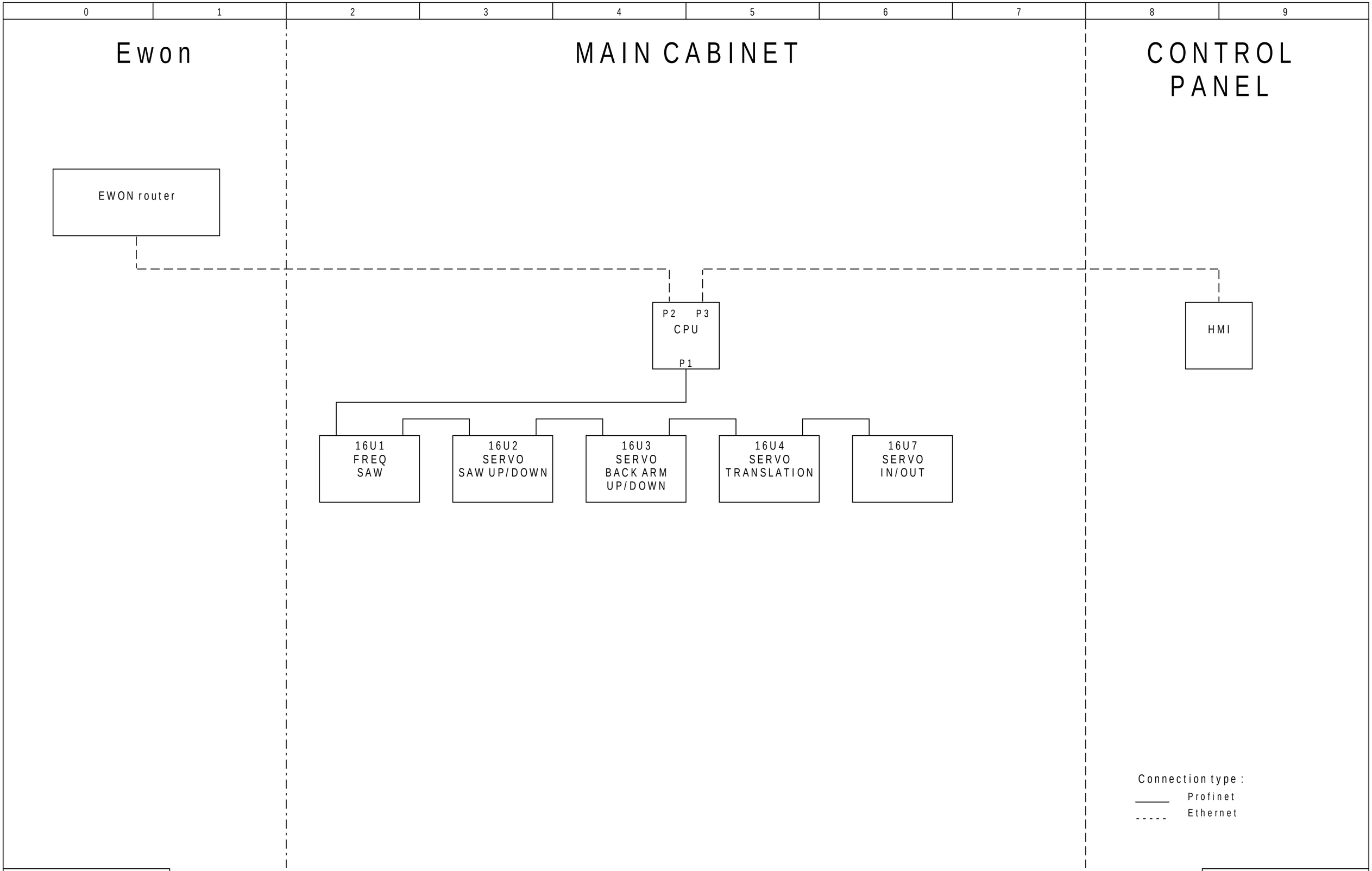


| | | | | | | | | |
|---|---|---|---|---|---|---|---|---|
| Start | 02-08-2019 | Engineer | WTH | Castrolanda | | Layout Network | CASCOL02 | |
| Change | | Revision | V2.3 | Order Number: | LE632589 | | | Page: |
| Print Date | 10-10-2019 | Project | | Production Number: | 3765386 | Project Description: Durand MSP 6040 | =MSP6040 | 51 |

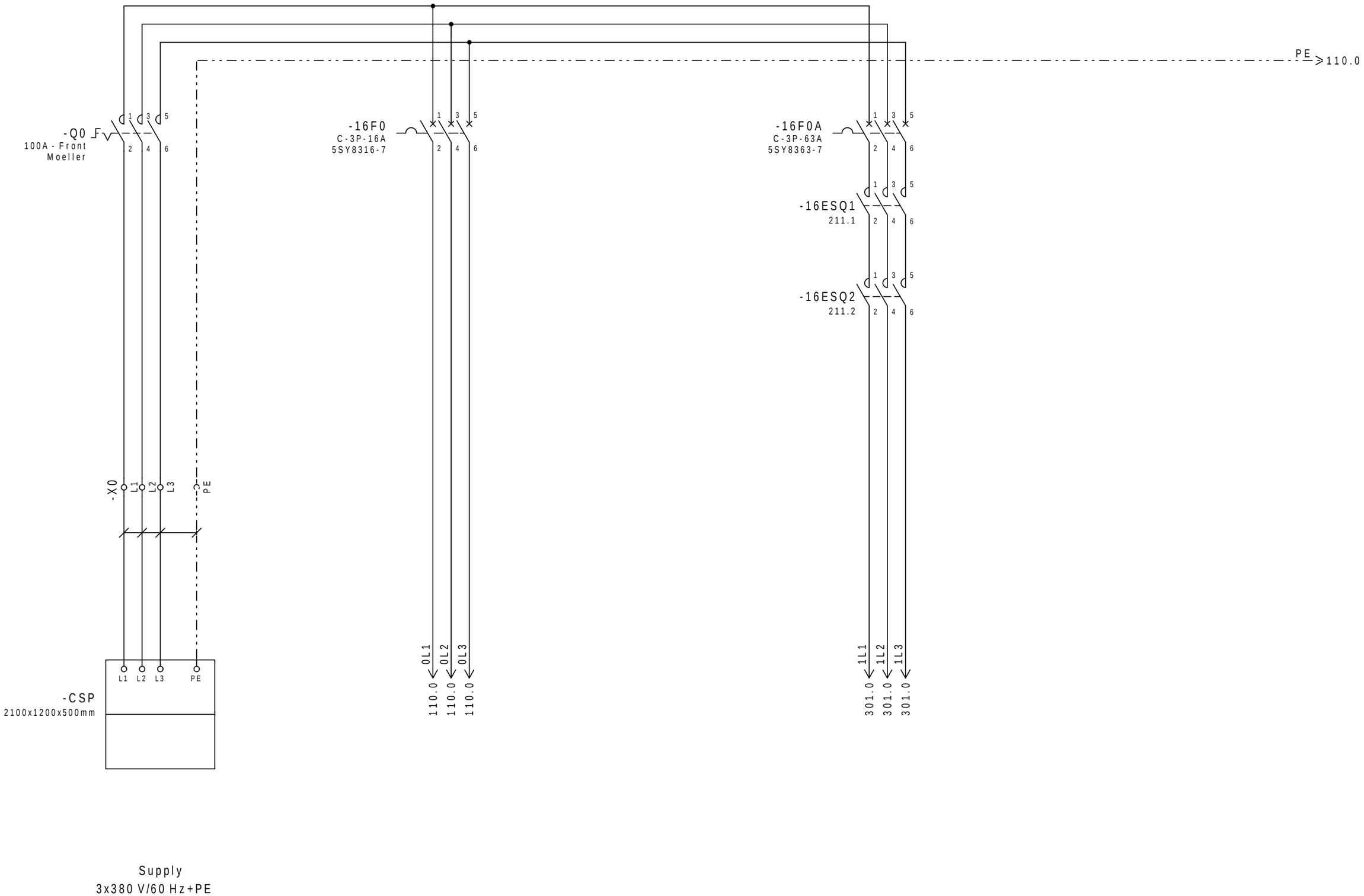
0
1
2
3
4
5
6
7
8
9
PE
110.0
-Q0
100A - Front
Moeller
-16F0
C-3P-16A
5SY8316-7
-16F0A
C-3P-63A
5SY8363-7
-16ESQ1
211.1
-16ESQ2
211.2
-X0
L1
L2
L3
PE
-CSP
2100x1200x500mm
0L1
0L2
0L3
110.0
1L1
1L2
1L3
301.0
Supply
3x380 V/60 Hz+PE

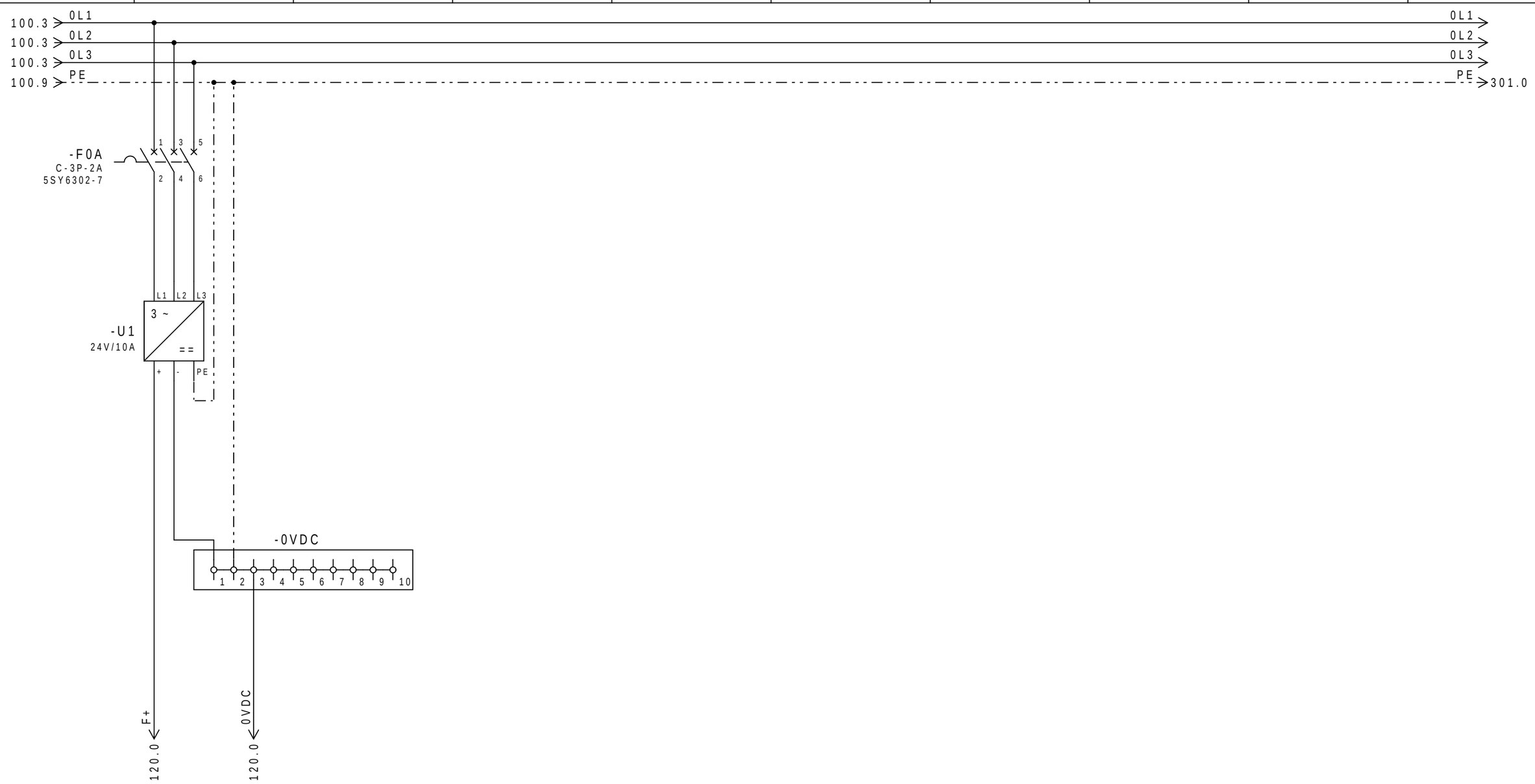


Control Voltage
24Vdc

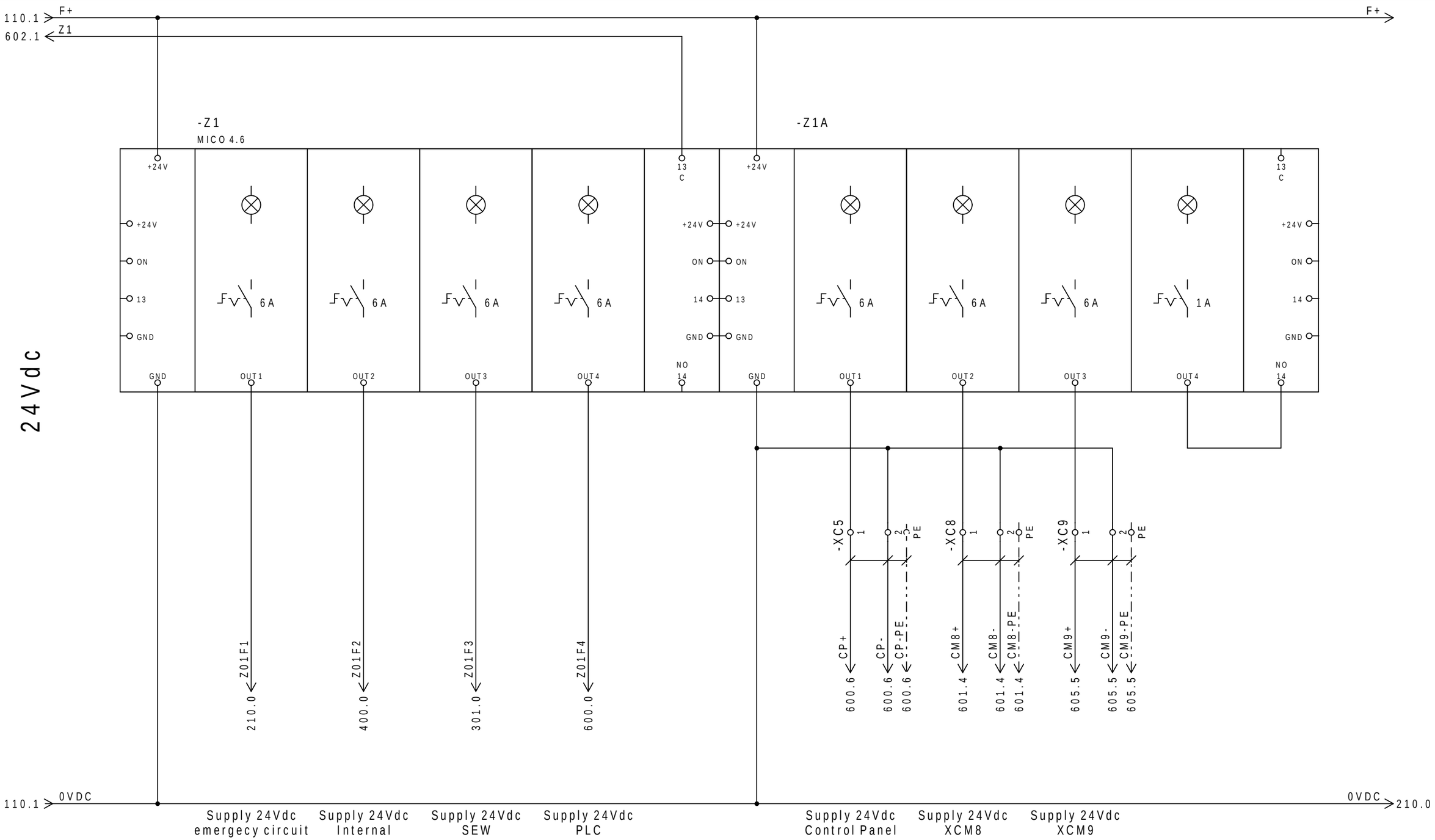
0
1
2
3
4
5
6
7
8
9
110.1
F+
602.1
Z1
F+
-Z1
MICO 4.6
-Z1A
+24V
ON
13
GND
OUT1
OUT2
OUT3
OUT4
14
NO
C
6A
1A
24Vdc
Z01F1
210.0
Z01F2
400.0
Z01F3
301.0
Z01F4
600.0
-XC5
-XC8
-XC9
CP+
CP-
CP-PE
CM8+
CM8-
CM8-PE
CM9+
CM9-
CM9-PE
PE
600.6
601.4
605.5
0VDC
210.0
Supply 24Vdc emergecy circuit
Supply 24Vdc Internal
Supply 24Vdc SEW
Supply 24Vdc PLC
Supply 24Vdc Control Panel
Supply 24Vdc XCM8
Supply 24Vdc XCM9

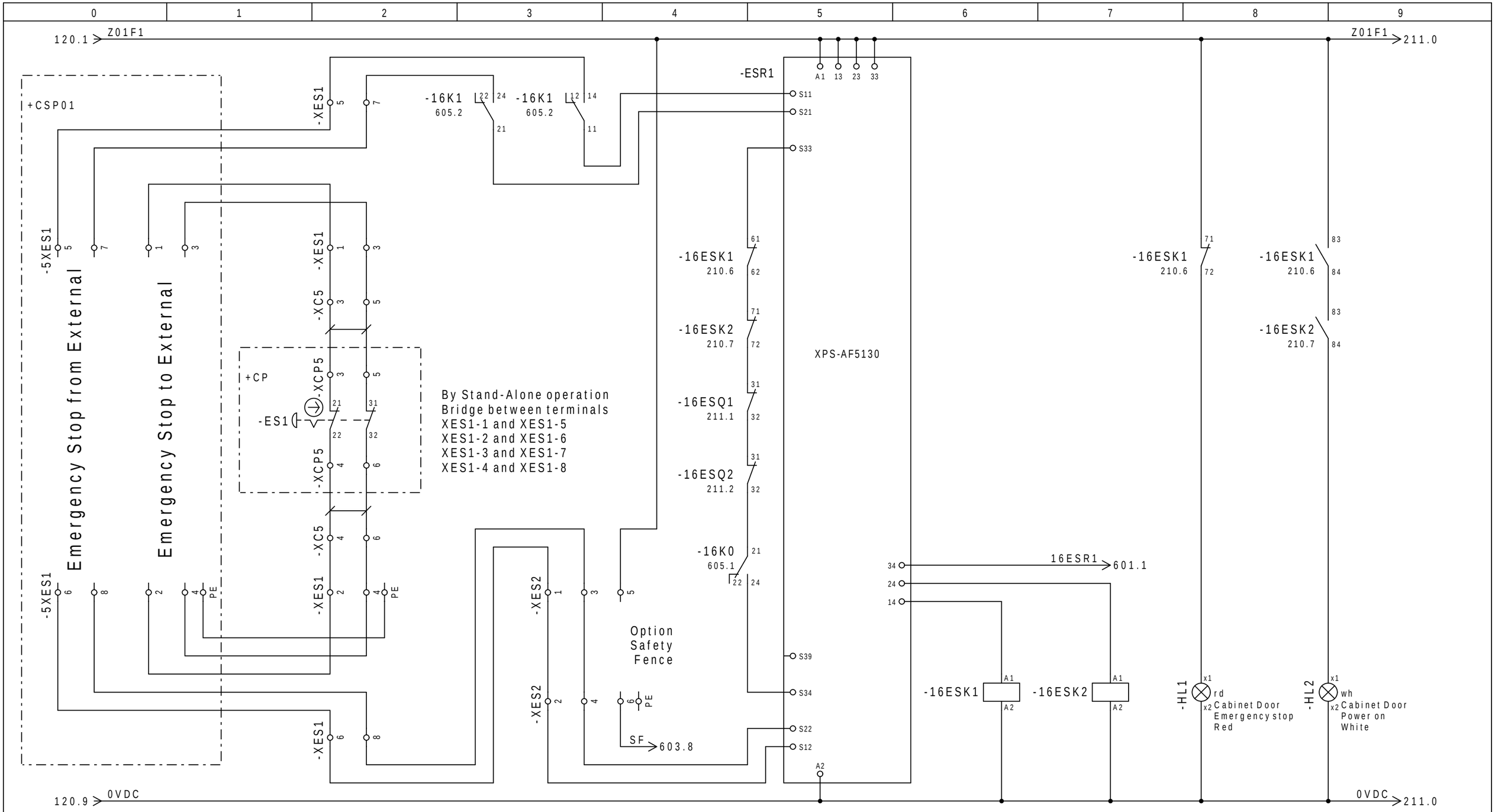


3RH2262-2BB40

| NO | NC |
|---|---|
| 210.9 | 210.5 |
| 211.1 | 210.8 |
| 605.6 | |

3RH2262-2BB40

| NO | NC |
|---|---|
| 210.9 | 210.5 |
| 211.1 | |
| 605.6 | |

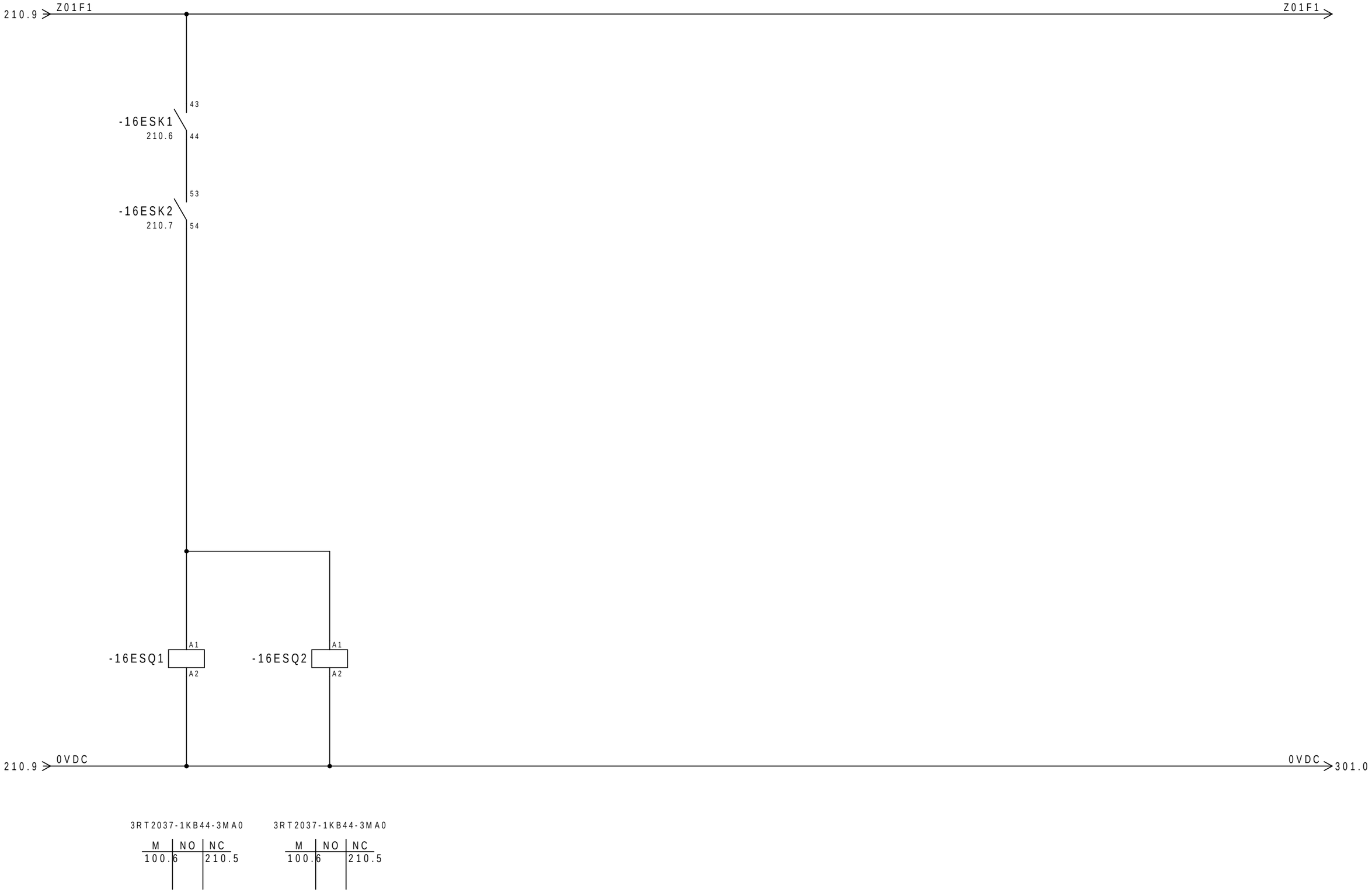


←210

301→

| | | | | | | | |
|---|---|---|---|---|---|---|---|
| Start | 02-08-2019 | Engineer | WTH | Castrolanda | | Control current | CASCOL02 |
| Change | | Revision | V2.3 | Order Number: | LE632589 | | Page: |
| Print Date | 10-10-2019 | Project | | Production Number: | 3765386 | Project Description: Durand MSP 6040 | =MSP6040 211 |

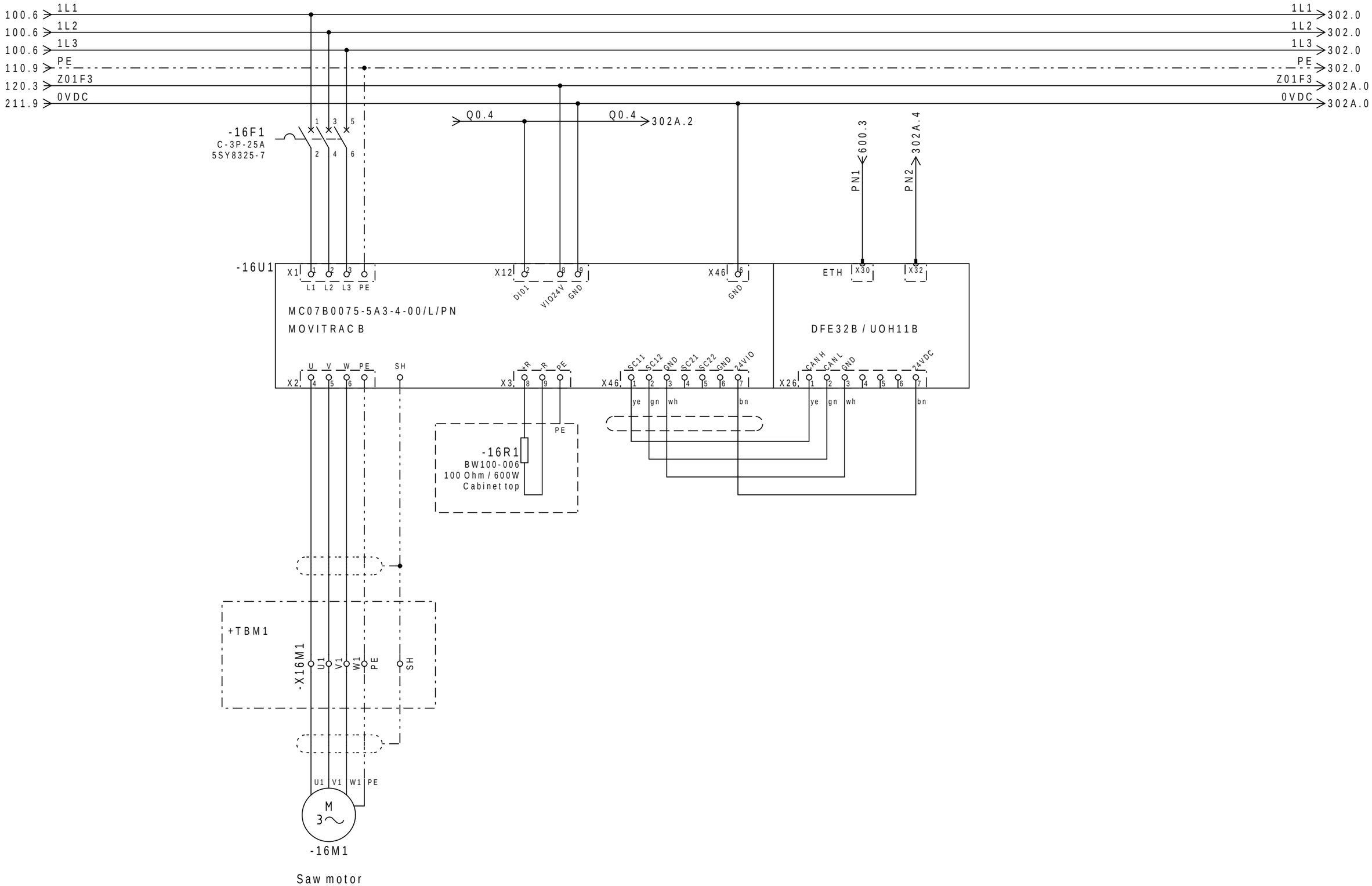


211

302

| | | | | | |
|---|---|---|---|---|---|
| Start | 02-08-2019 | Engineer | WTH | Castrolanda | |
| Change | | Revision | V2.3 | Order Number: | LE632589 |
| Print Date | 10-10-2019 | Project | | Production Number: | 3765386 |

Main Current
Saw motor VFD

Project Description: Durand MSP 6040

CASCOL02

=MSP6040

Page: 301

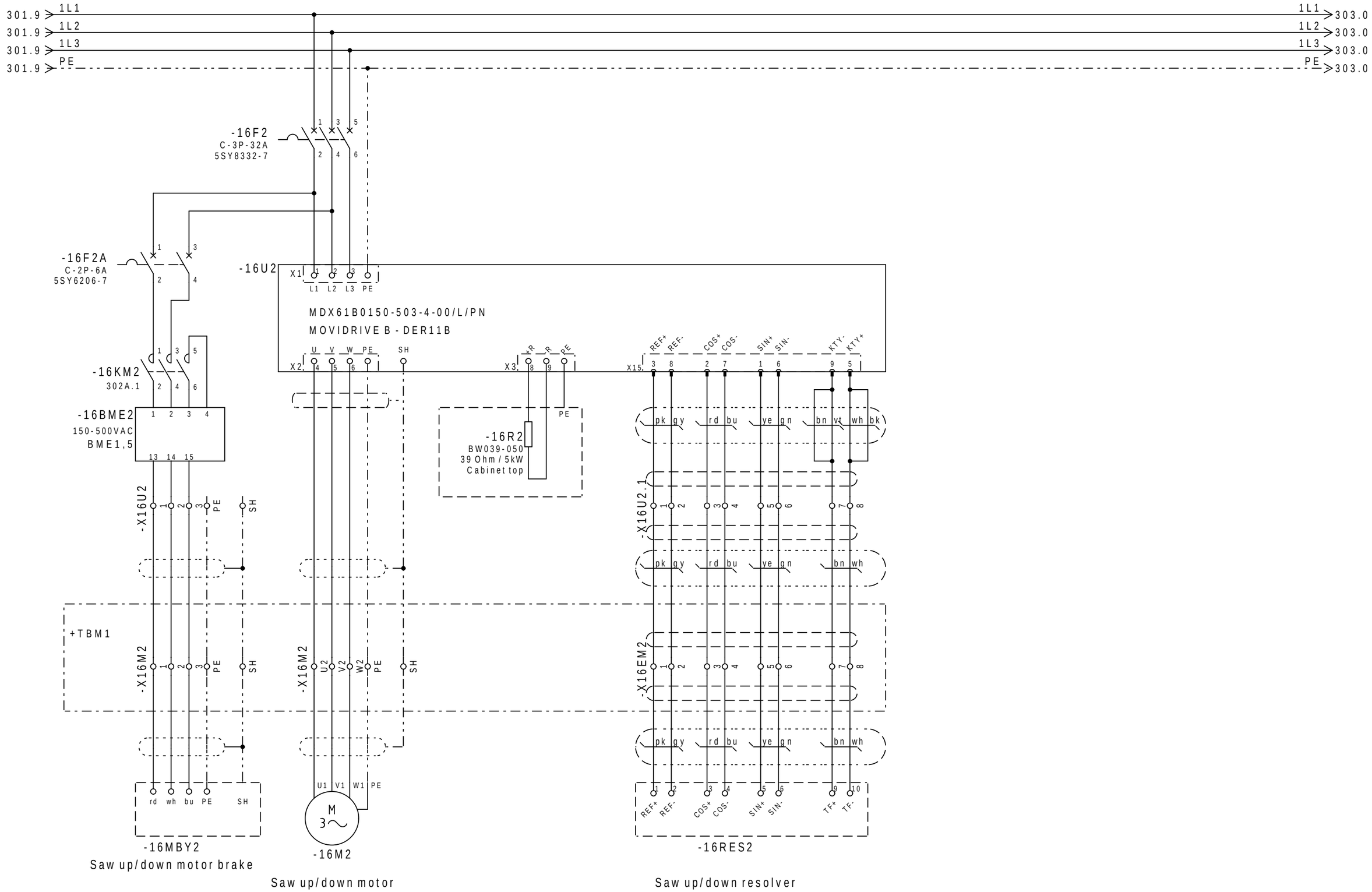


← 301

302A →

| | | | | | | | |
|---|---|---|---|---|---|---|---|
| Start | 02-08-2019 | Engineer | WTH | Castrolanda | | Main current Y-axis Resolver<br>Saw side up-down motor VFD | CASCOL02 |
| Change | | Revision | V2.3 | Order Number: | LE632589 | | Page: |
| Print Date | 10-10-2019 | Project | | Production Number: | 3765386 | Project Description: Durand MSP 6040 | =MSP6040 302 |

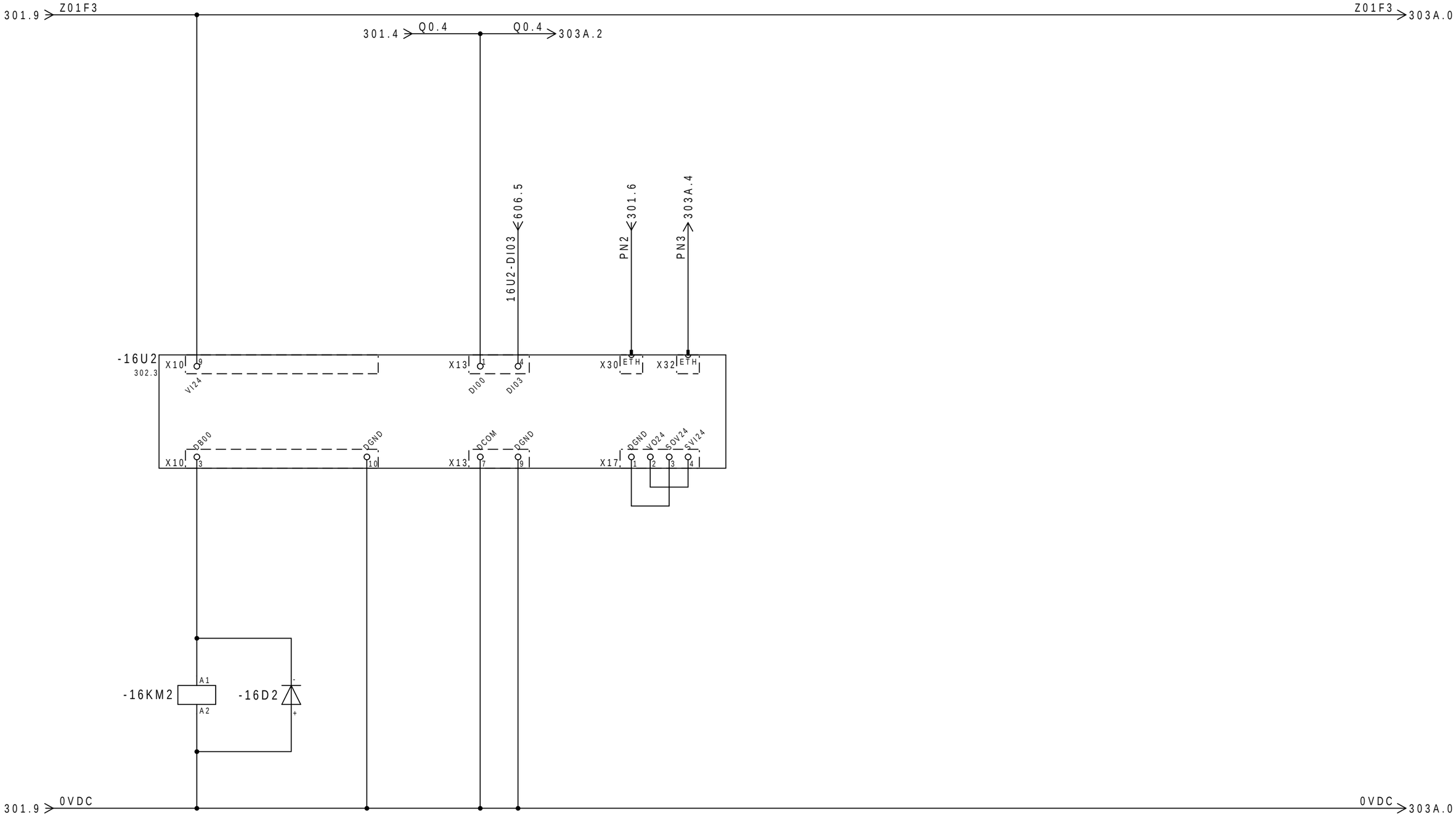


3RT2016-2BB41(9A)

| M | NO | NC |
|---|---|---|
| 302.1 | | |

302

303

| | | | | | |
|---|---|---|---|---|---|
| Start | 02-08-2019 | Engineer | WTH | Castrolanda | |
| Change | | Revision | V2.3 | Order Number: | LE632589 |
| Print Date | 10-10-2019 | Project | | Production Number: | 3765386 |

Control current Y-axis Resolver
Saw side up-down motor VFD

Project Description: Durand MSP 6040

CASCOL02

=MSP6040

Page: 302 A

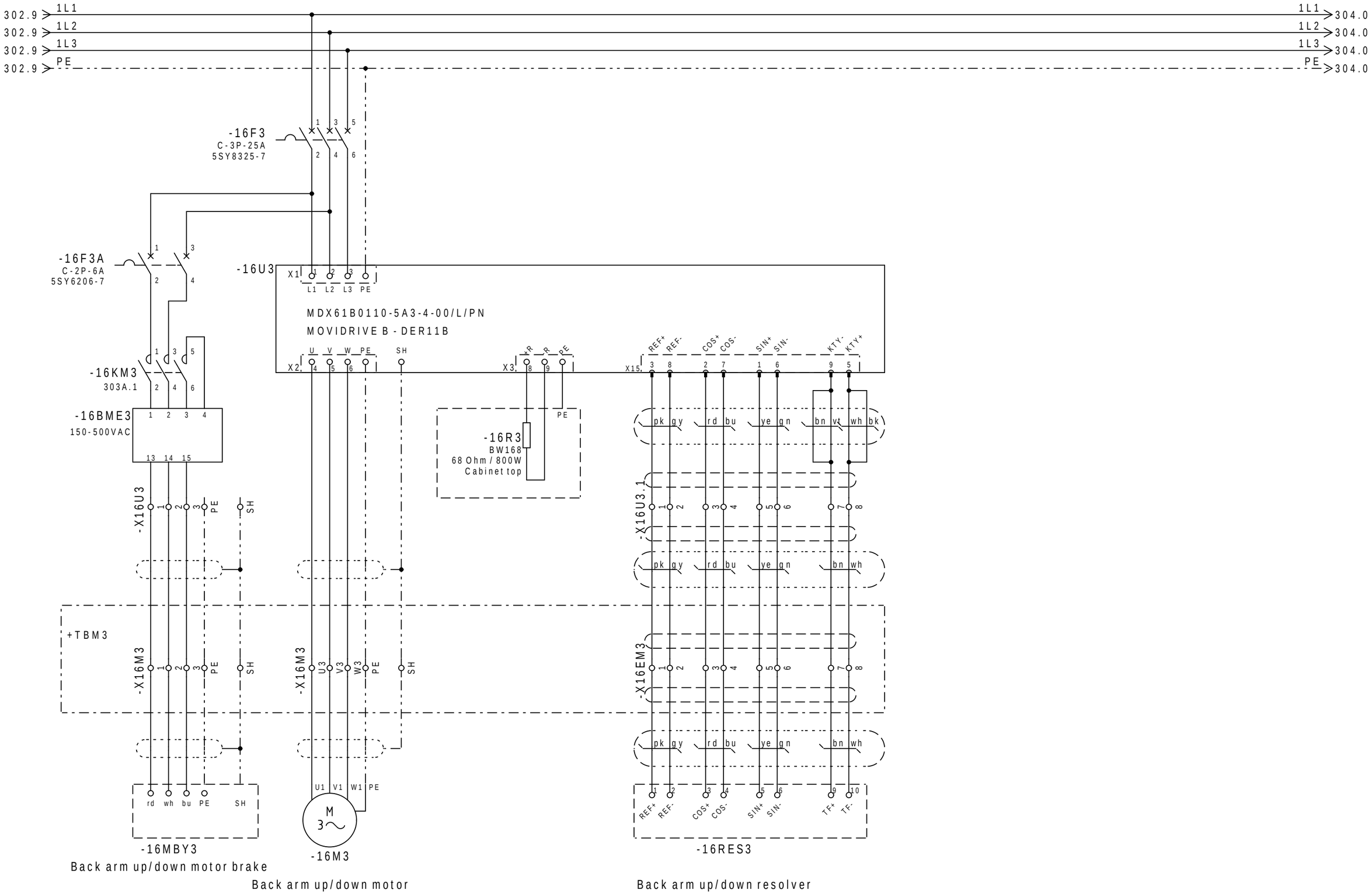


302A

303A

| | | | | | |
|---|---|---|---|---|---|
| Start | 02-08-2019 | Engineer | WTH | Castrolanda | |
| Change | | Revision | V2.3 | Order Number: | LE632589 |
| Print Date | 10-10-2019 | Project | | Production Number: | 3765386 |

Main current Y-axis Resolver
Back arm up-down motor VFD

Project Description: Durand MSP 6040

CASCOL02

=MSP6040

Page: 303

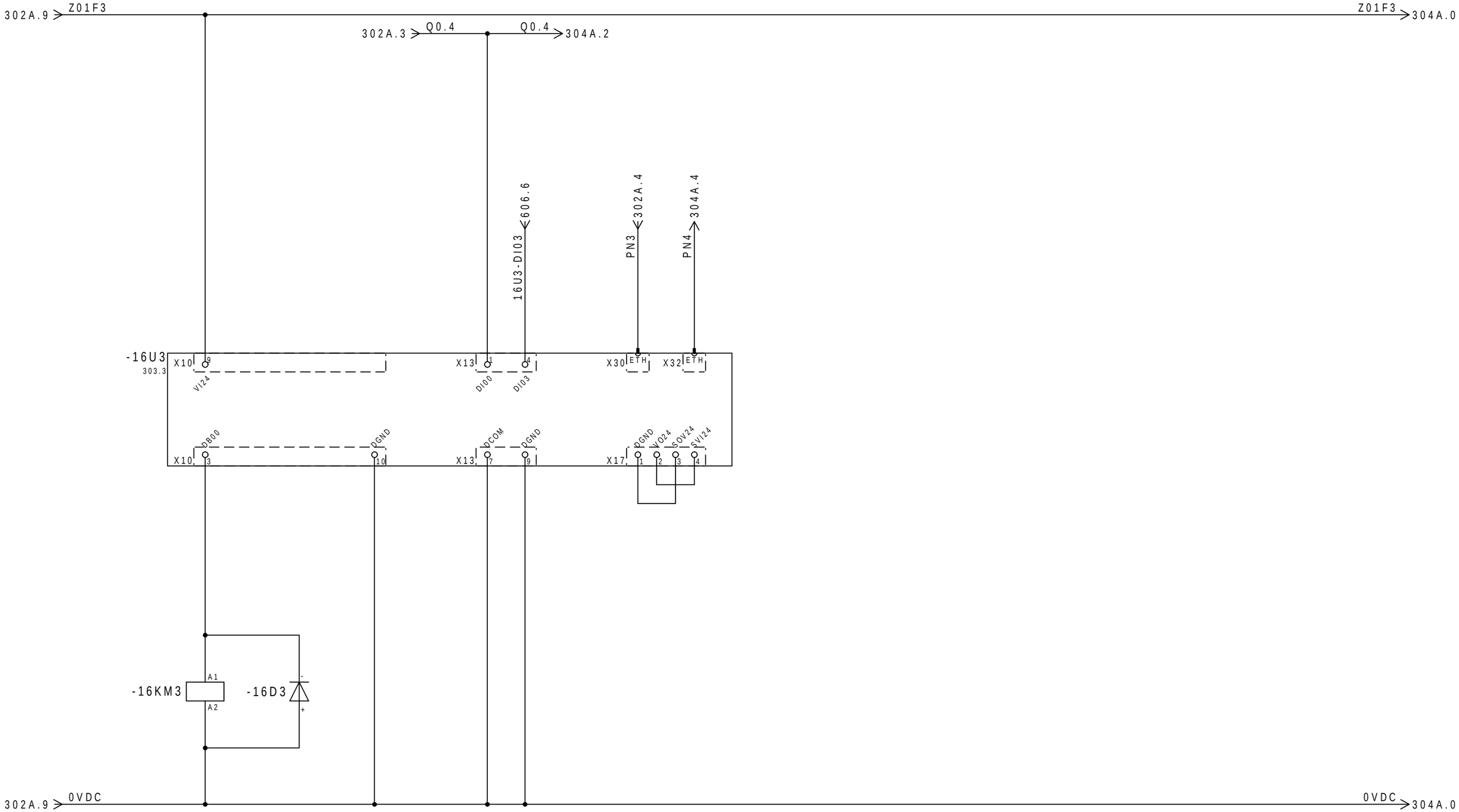


3RT2016-2BB41(9A)

| M | NO | NC |
|---|---|---|
| 303.1 | | |

303

304

| | | | | | |
|---|---|---|---|---|---|
| Start | 02-08-2019 | Engineer | WTH | Castrolanda | |
| Change | | Revision | V2.3 | Order Number: | LE632589 |
| Print Date | 10-10-2019 | Project | | Production Number: | 3765386 |

Control current Y-axis Resolver
Back arm up-down motor VFD

Project Description: Durand MSP 6040

CASCOL02

=MSP6040

Page: 303 A

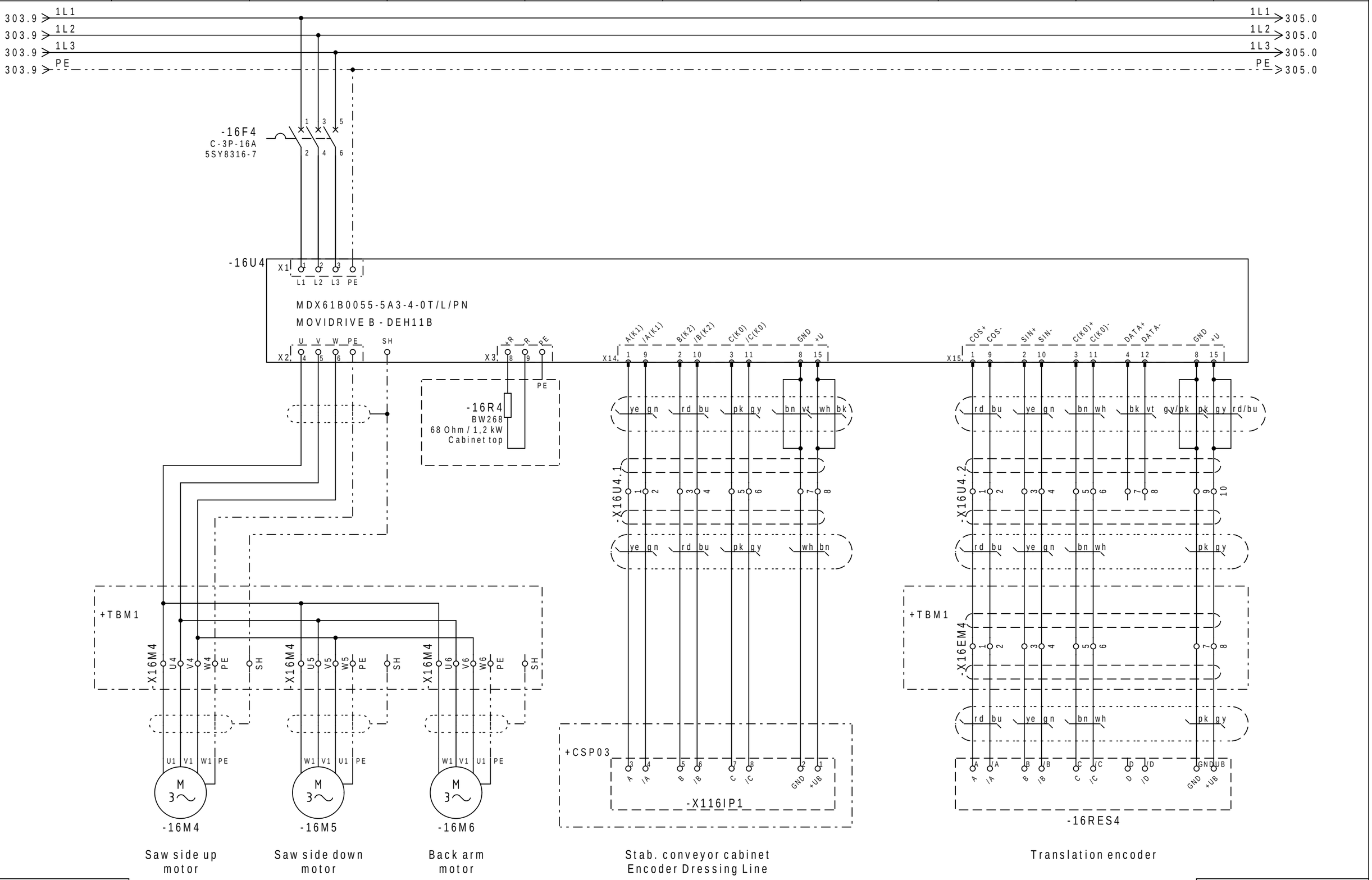


← 303A

304A →

| | | | | | | | |
|---|---|---|---|---|---|---|---|
| Start | 02-08-2019 | Engineer | WTH | Castrolanda | | Main current X axis Encoders<br>Translation VFD | CASCOL02 |
| Change | | Revision | V2.3 | Order Number: | LE632589 | | Page: |
| Print Date | 10-10-2019 | Project | | Production Number: | 3765386 | Project Description: Durand MSP 6040 | =MSP6040 304 |

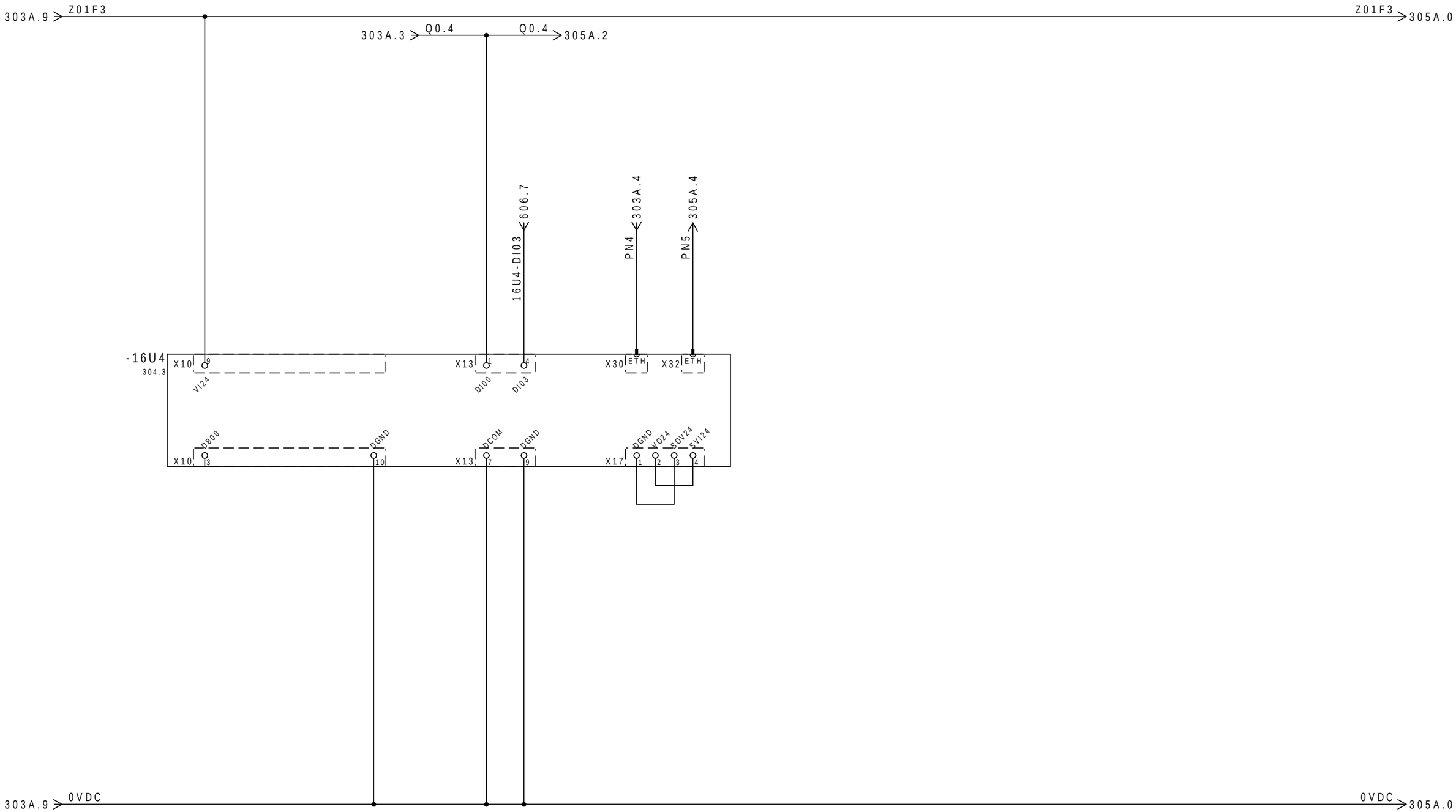


304

305

| | | | | | |
|---|---|---|---|---|---|
| Start | 02-08-2019 | Engineer | WTH | Castrolanda | |
| Change | | Revision | V2.3 | Order Number: | LE632589 |
| Print Date | 10-10-2019 | Project | | Production Number: | 3765386 |

Control current X axis Encoders
Translation VFD

Project Description: Durand MSP 6040

CASCOL02

=MSP6040

Page: 304 A

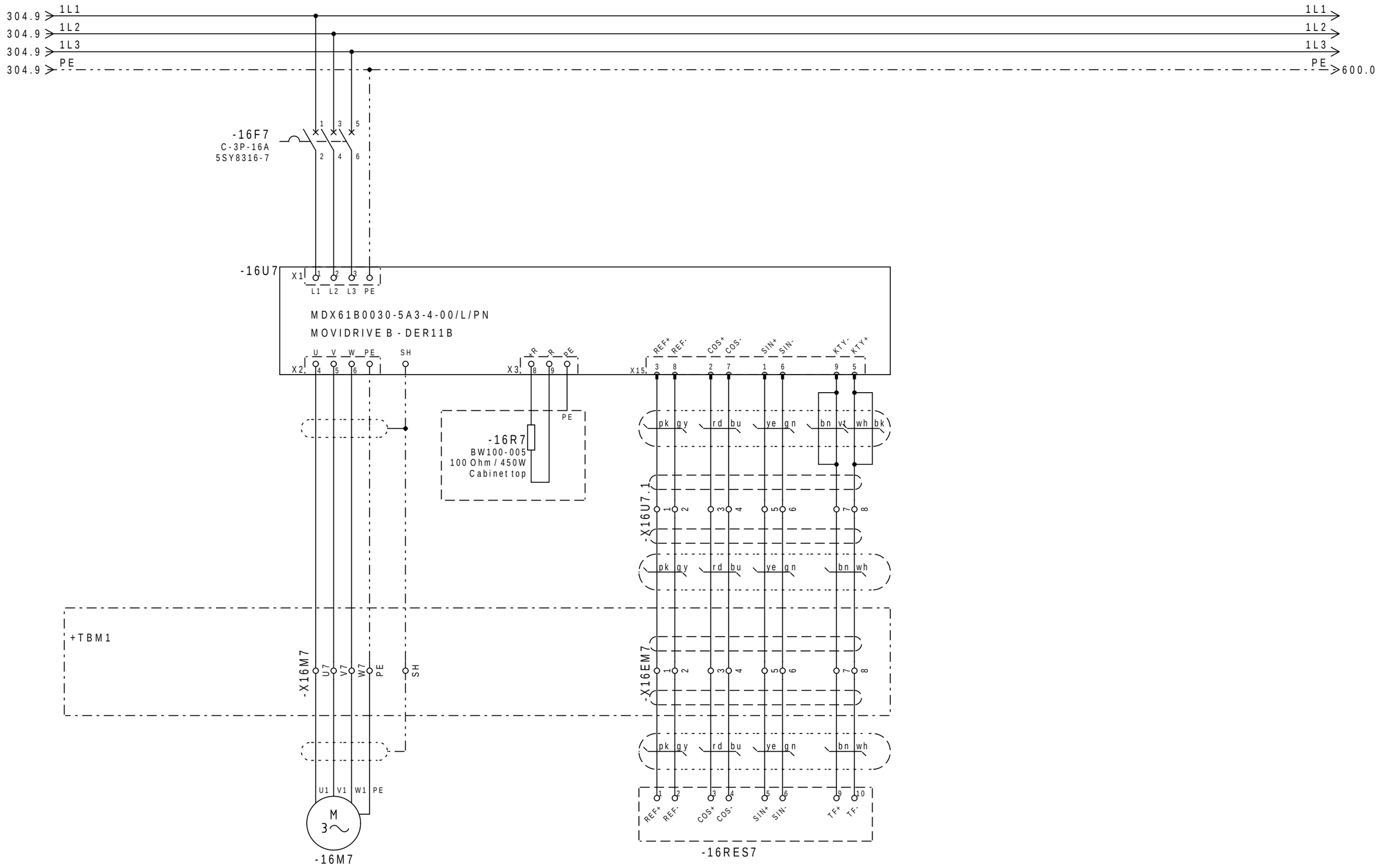


304A

305A

| | | | | | |
|---|---|---|---|---|---|
| Start | 02-08-2019 | Engineer | WTH | Castrolanda | |
| Change | | Revision | V2.3 | Order Number: | LE632589 |
| Print Date | 10-10-2019 | Project | | Production Number: | 3765386 |

Main current Z-axis Resolver in-out motor VFD

Project Description: Durand MSP 6040

CASCOL02

=MSP6040

Page: 305

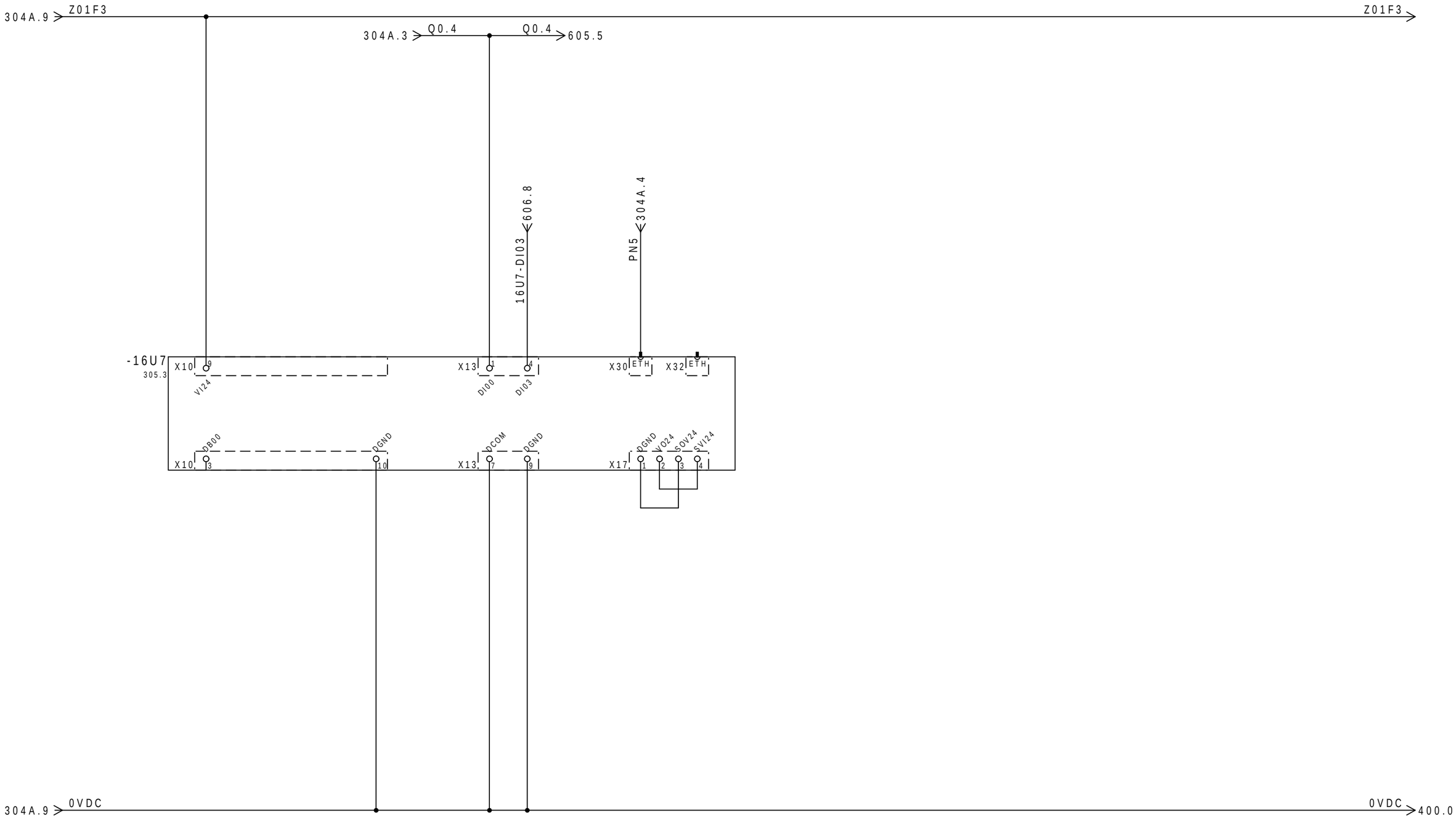


←305

400→

| | | | | | |
|---|---|---|---|---|---|
| Start | 02-08-2019 | Engineer | WTH | Castrolanda | |
| Change | | Revision | V2.3 | Order Number: | LE632589 |
| Print Date | 10-10-2019 | Project | | Production Number: | 3765386 |

Control current Z-axis Resolver
in-out motor VFD

Project Description: Durand MSP 6040

CASCOL02

=MSP6040

Page: 305 A

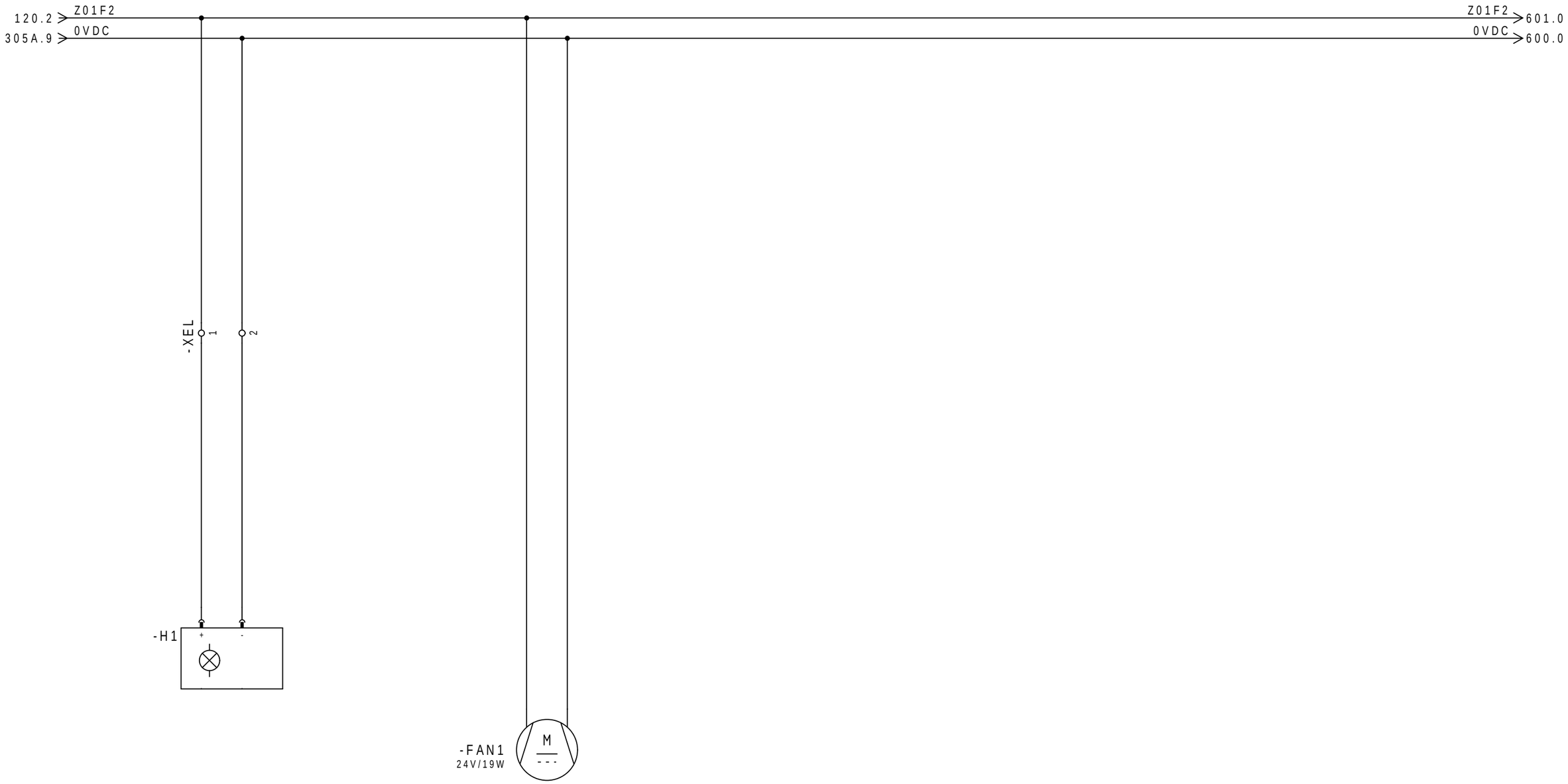


Switch panel Illumination
24VDC

Fan Switch
panel

305A

600

| | | | | | | | |
|---|---|---|---|---|---|---|---|
| Start | 02-08-2019 | Engineer | WTH | Castrolanda | | Control-voltage internal | CASCOL02 |
| Change | | Revision | V2.3 | Order Number: | LE632589 | | Page: |
| Print Date | 10-10-2019 | Project | | Production Number: | 3765386 | Project Description: Durand MSP 6040 | =MSP6040 400 |

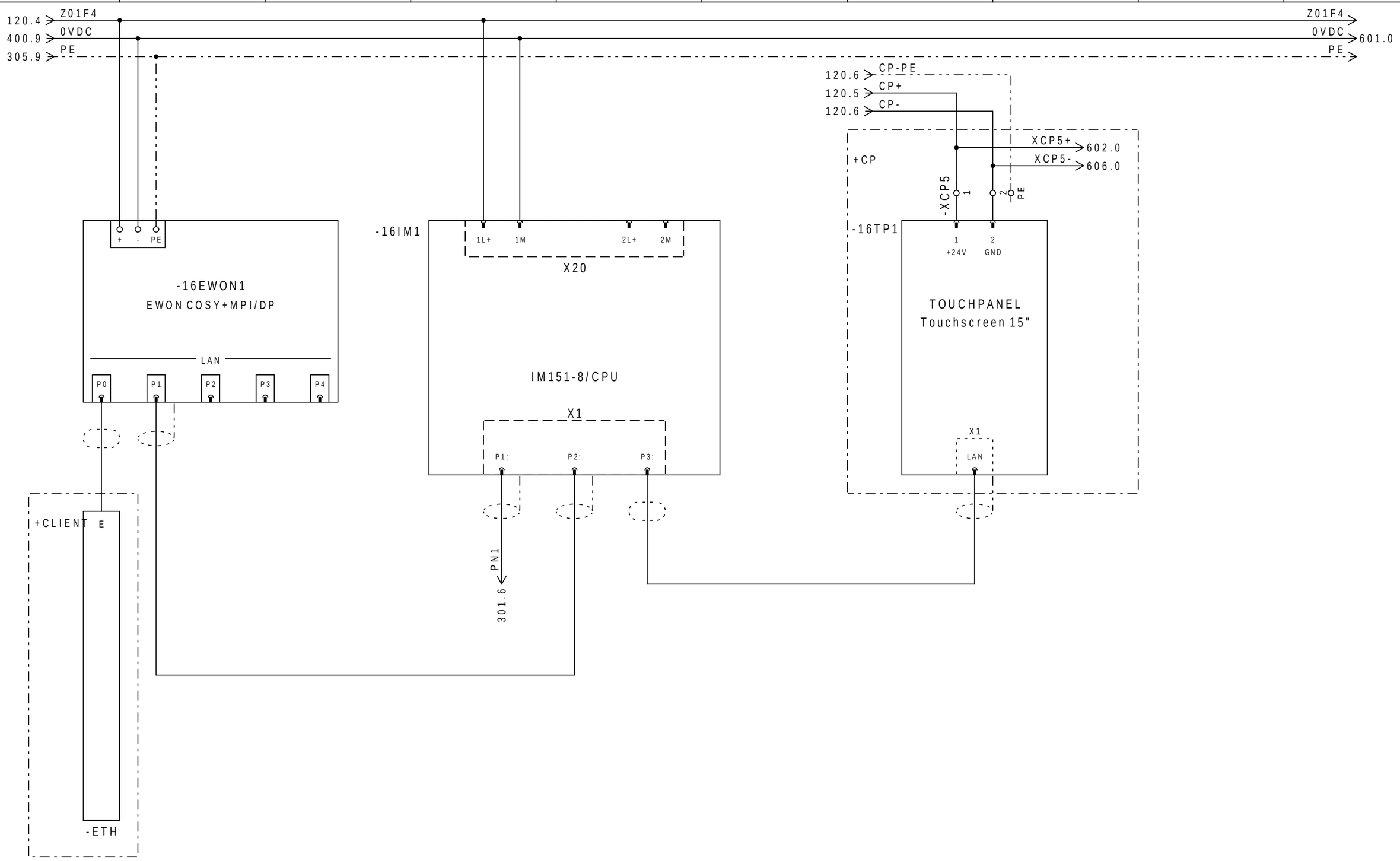


← 400

601 →

| | | | | | | | |
|---|---|---|---|---|---|---|---|
| Start | 02-08-2019 | Engineer | WTH | Castrolanda | | Control current IM151-8 | CASCOL02 |
| Change | | Revision | V2.3 | Order Number: | LE632589 | | Page: |
| Print Date | 10-10-2019 | Project | | Production Number: | 3765386 | Project Description: Durand MSP 6040 | =MSP6040 600 |

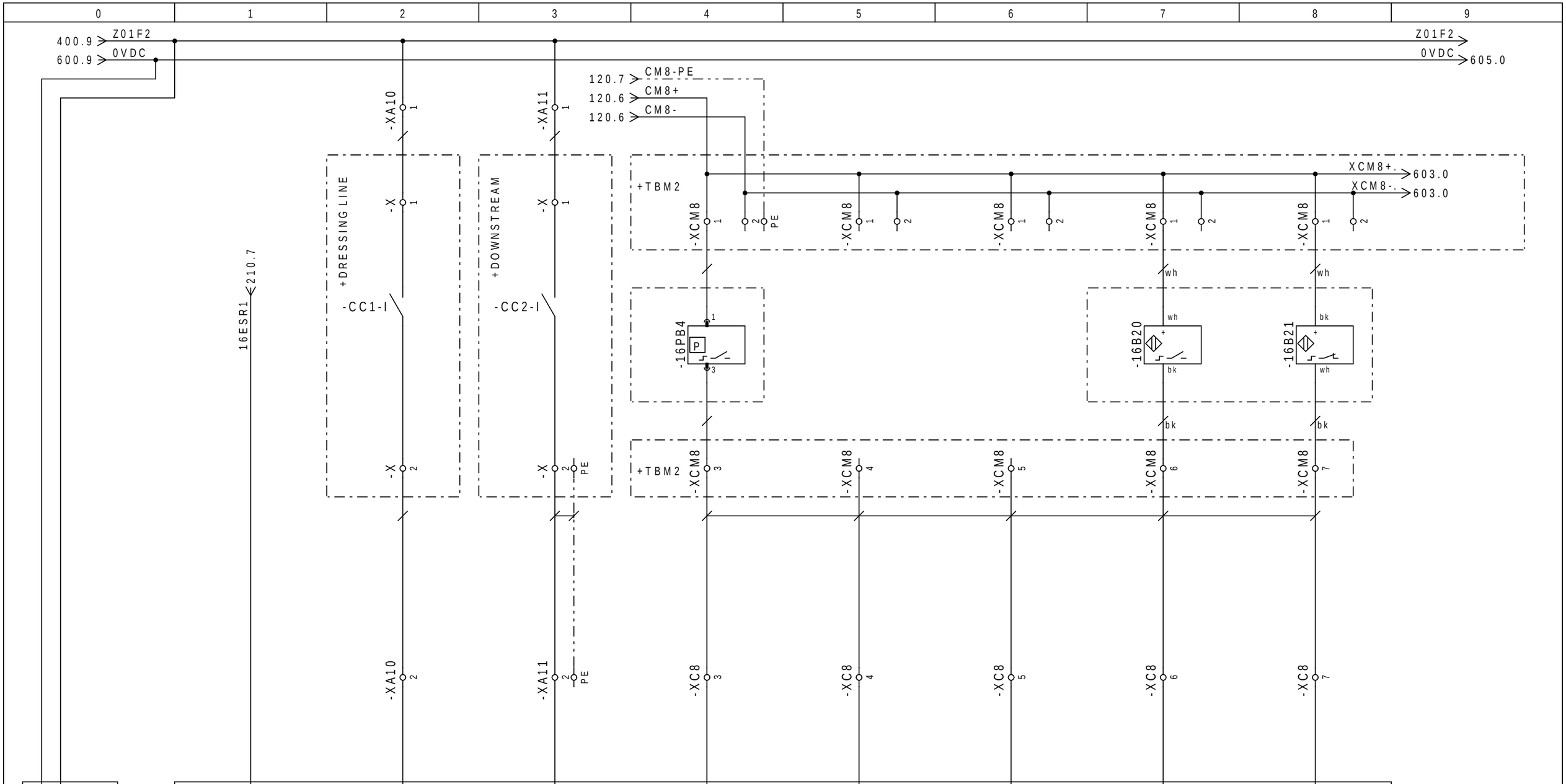


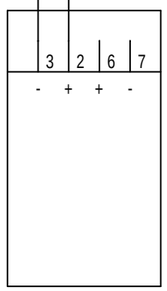


-16PME04

| 1 | 5 | 2 | 6 | 3 | 7 | 4 | 8 |
|---|---|---|---|---|---|---|---|
| I0.0 | I0.1 | I0.2 | I0.3 | I0.4 | I0.5 | I0.6 | I0.7 |
| Safety Relay OK | Dressing line on info | Cancel Cycle by Previous machine | Air pressure OK | Spare | Spare | X home | X End switch |

-16DI05
6ES7131-4BF00-0AA0

←600
602→

| | | | | | | | |
|---|---|---|---|---|---|---|---|
| Start | 02-08-2019 | Engineer | WTH | Castrolanda | | ET200S Input | CASCOL02 |
| Change | | Revision | V2.3 | Order Number: | LE632589 | | Page: |
| Print Date | 10-10-2019 | Project | | Production Number: | 3765386 | Project Description: Durand MSP 6040 | =MSP6040 601 |

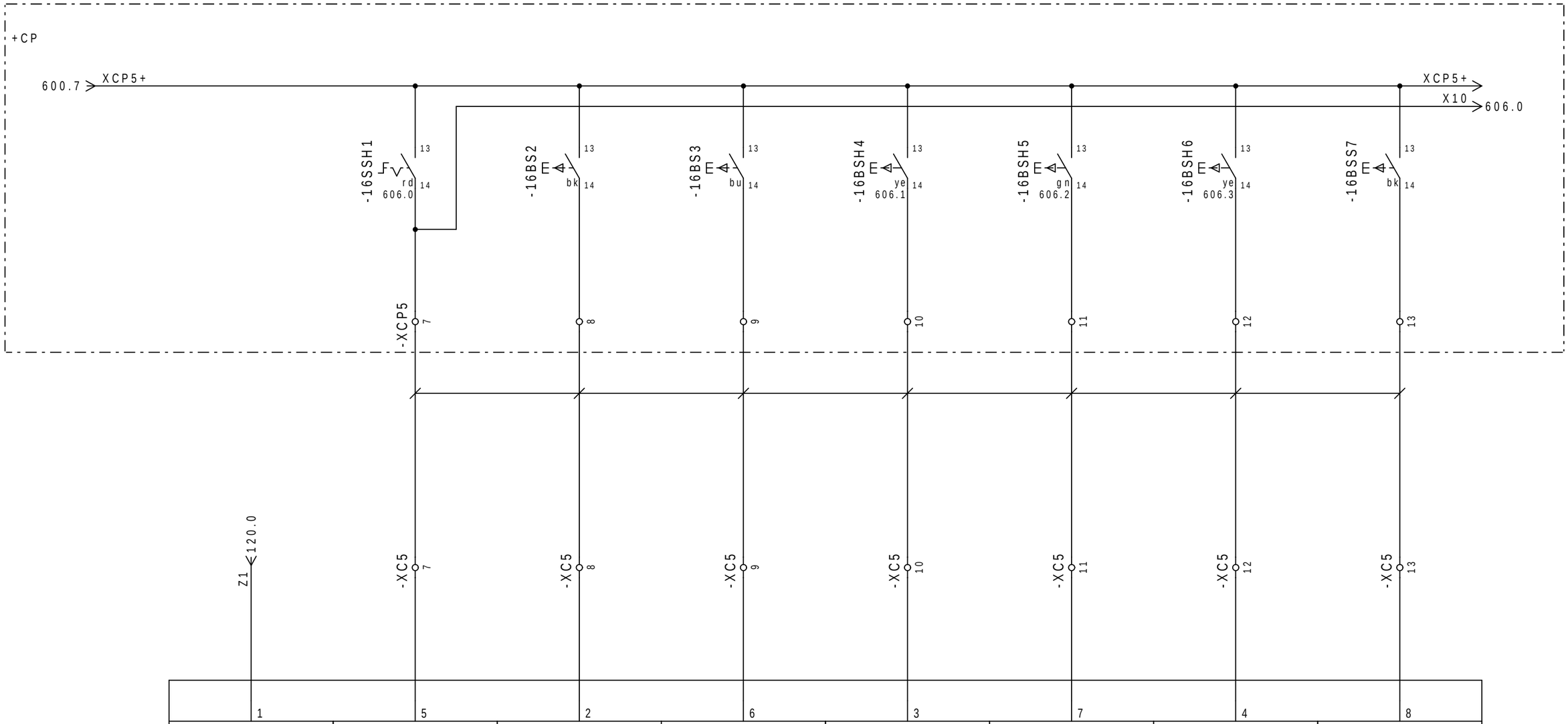


| I1.0 | I1.1 | I1.2 | I1.3 | I1.4 | I1.5 | I1.6 | I1.7 |
|---|---|---|---|---|---|---|---|
| Fuse module "1"=oke | Enable Key Dressing Line | PB Cancel Cicle | PB Reset | PB Initial Position | PB Automatic mode | PB Cleaning Mode | PB Stop |

-16DI06
6ES7131-4BF00-0AA0

601

603

| | | | | | |
|---|---|---|---|---|---|
| Start | 02-08-2019 | Engineer | WTH | Castrolanda | |
| Change | | Revision | V2.3 | Order Number: | LE632589 |
| Print Date | 10-10-2019 | Project | | Production Number: | 3765386 |

ET200S Input

Project Description: Durand MSP 6040

CASCOL02

=MSP6040

Page: 602

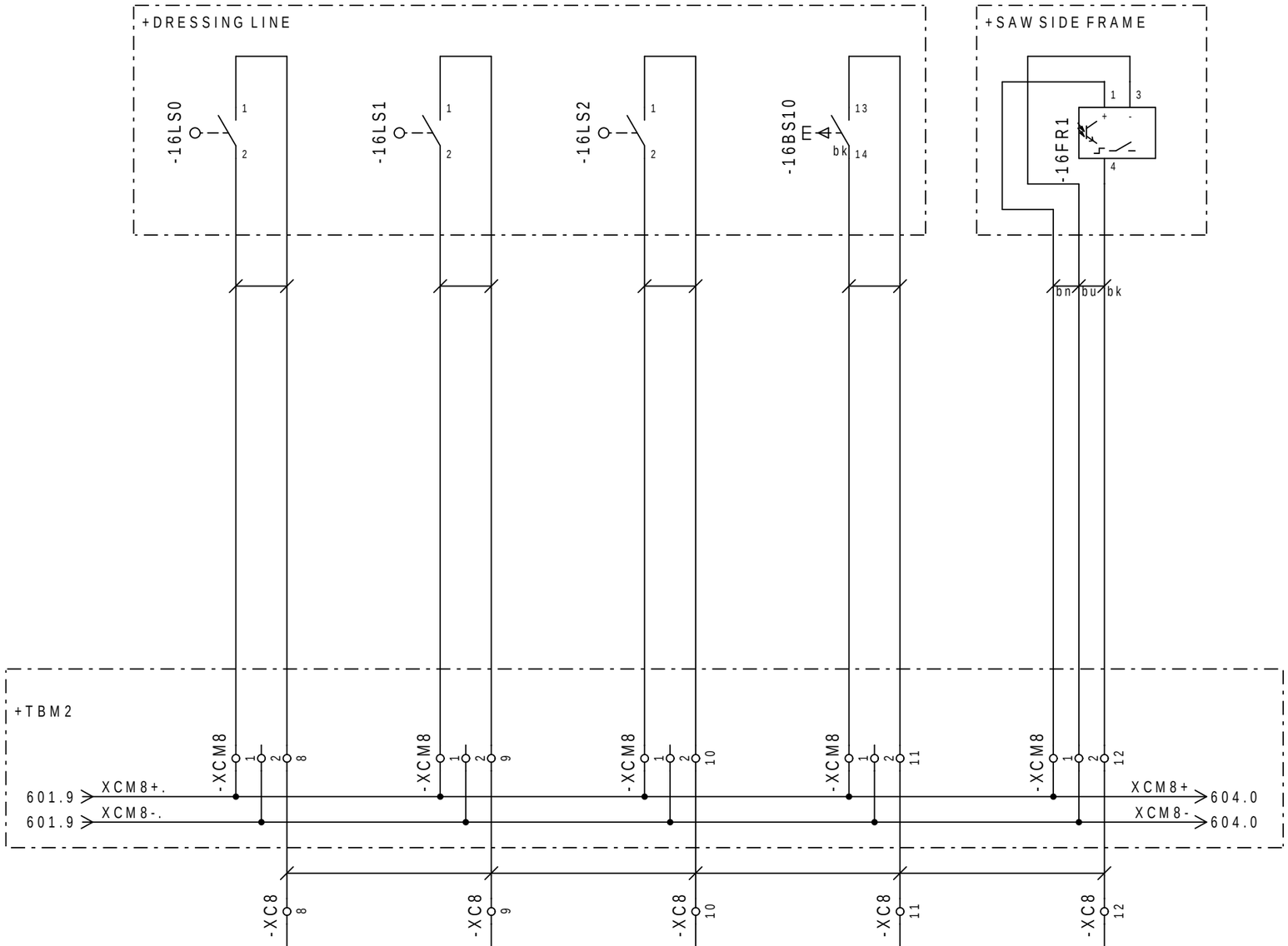


| 1 | 5 | 2 | 6 | 3 | 7 | 4 | 8 |
|---|---|---|---|---|---|---|---|
| I2.0 | I2.1 | I2.2 | I2.3 | I2.4 | I2.5 | I2.6 | I2.7 |
| Saw side Hook 1 (If Hookline) | Saw side Hook 2 (if hookline) gambrel limit switch | Saw side Conveyor pitch | Saw side PB Skip hog | Saw side Measurement laser | Spare | Spare | Option Safety Fence |

-16DI07
6ES7131-4BF00-0AA0

602
604

| | | | | | |
|---|---|---|---|---|---|
| Start | 02-08-2019 | Engineer | WTH | Castrolanda | |
| Change | | Revision | V2.3 | Order Number: | LE632589 |
| Print Date | 10-10-2019 | Project | | Production Number: | 3765386 |

ET200S Input

Project Description: Durand MSP 6040

CASCOL02

=MSP6040

Page: 603

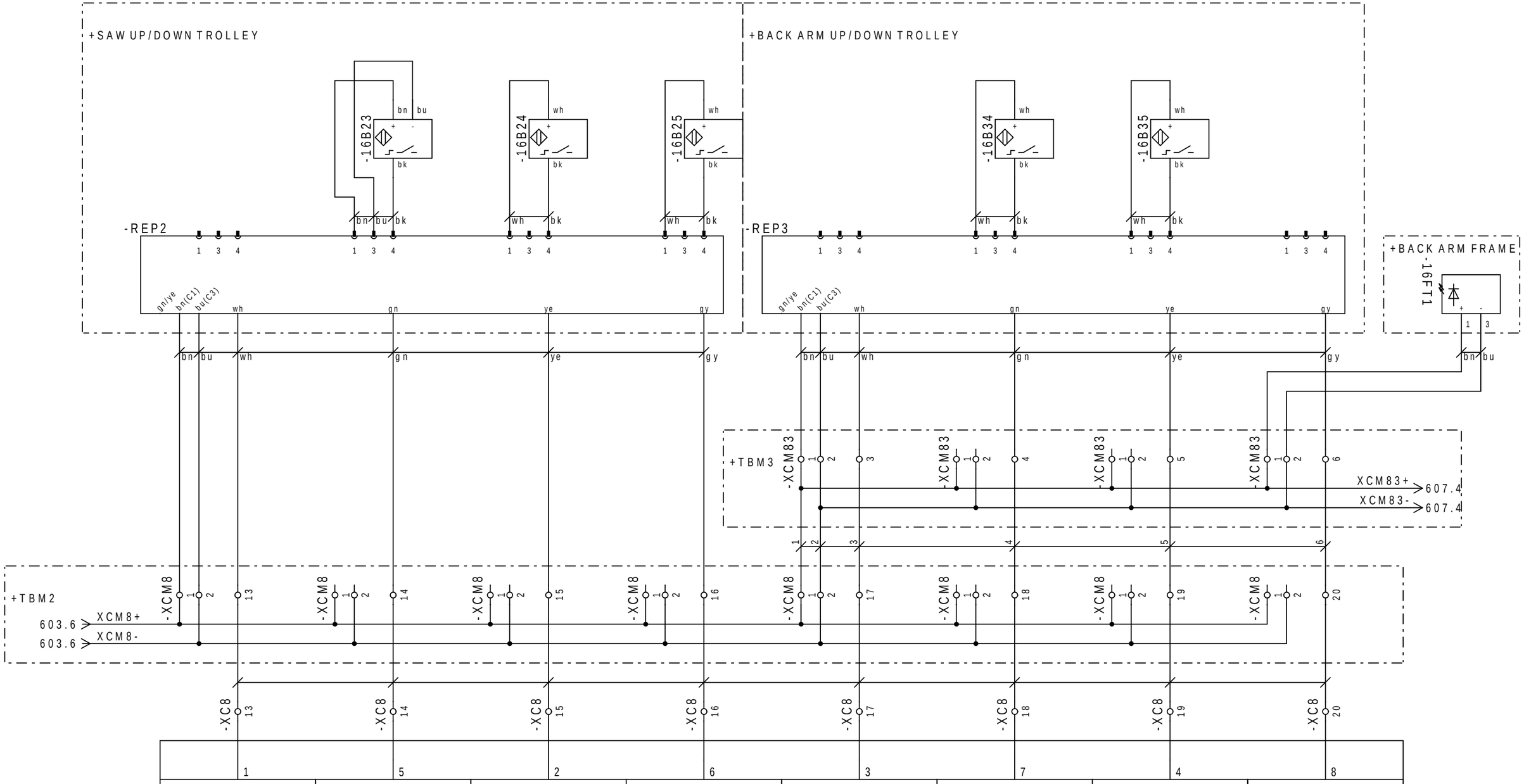


| 1 | 5 | 2 | 6 | 3 | 7 | 4 | 8 |
|---|---|---|---|---|---|---|---|
| I3.0 | I3.1 | I3.2 | I3.3 | I3.4 | I3.5 | I3.6 | I3.7 |
| Saw up/down Spare | Saw up/down Neck detection | Saw up/down Y-home | Saw up/down Z-home | Back arm Spare | Back arm YB Home | Back arm in | Back arm Spare |

-16DI08
6ES7131-4BF00-0AA0

603
605

| | | | | | |
|---|---|---|---|---|---|
| Start | 02-08-2019 | Engineer | WTH | Castrolanda | |
| Change | | Revision | V2.3 | Order Number: | LE632589 |
| Print Date | 10-10-2019 | Project | | Production Number: | 3765386 |

ET200S Input

Project Description: Durand MSP 6040

CASCOL02

=MSP6040

Page: 604

-16DO09
6ES7132-4BF00-0AA0

| Safety relay Reset | Safety Relay Unlocked | Dressing line stop control | Cancel cycle upstream machine | Unlock drives | Main air valve | Saw cold water | Spare |
|---|---|---|---|---|---|---|---|
| Q0.0 | Q0.1 | Q0.2 | Q0.3 | Q0.4 | Q0.5 | Q0.6 | Q0.7 |
| 1 | 5 | 2 | 6 | 3 | 7 | 4 | 8 |

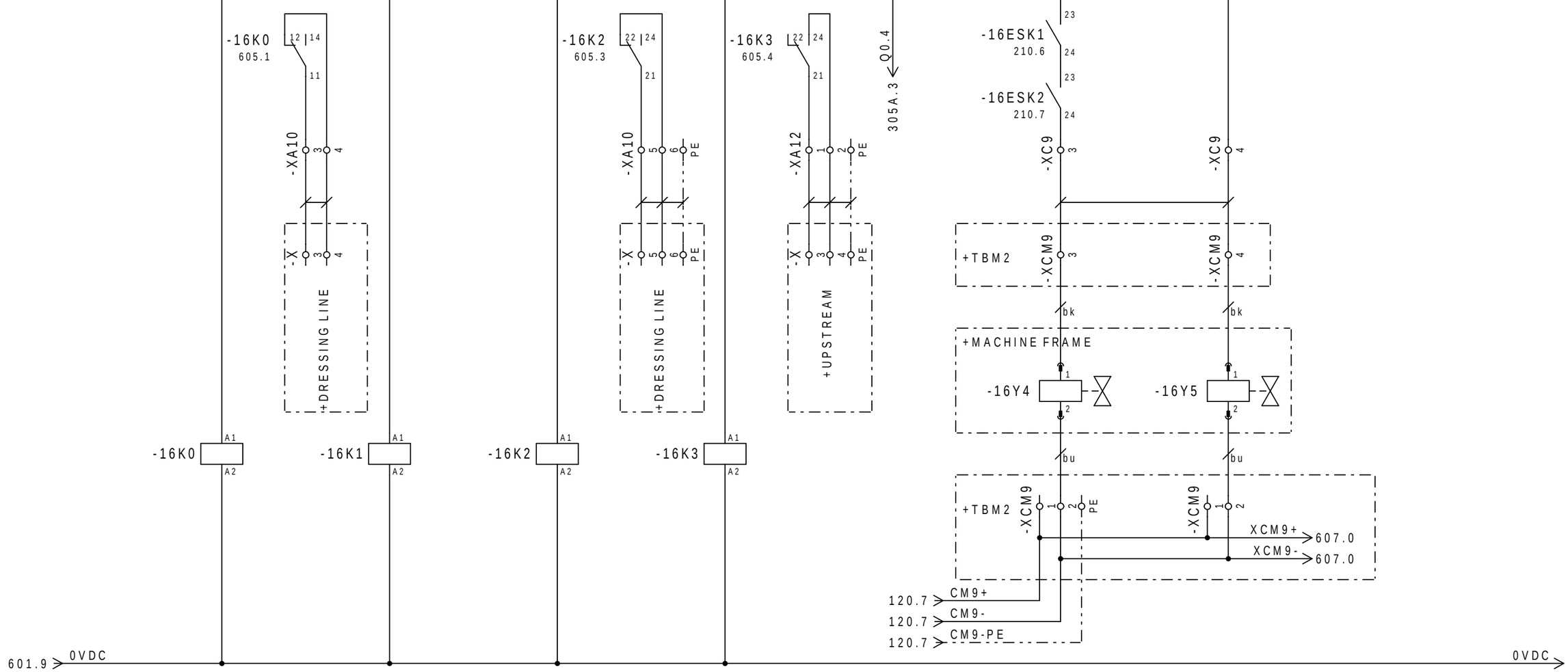


C4A40BX/24VACDC

| NO | NC |
|---|---|
| 210.5 | 210.5 |
| 605.2 | 605.2 |

C4A40BX/24VACDC

| NO | NC |
|---|---|
| 210.3 | 210.3 |
| 210.3 | 210.3 |

C4A40BX/24VACDC

| NO | NC |
|---|---|
| 605.4 | 605.4 |

C4A40BX/24VACDC

| NO | NC |
|---|---|
| 605.5 | 605.5 |

←604
606→

| | | | | | | | |
|---|---|---|---|---|---|---|---|
| Start | 02-08-2019 | Engineer | WTH | Castrolanda | | ET200S Output | CASCOL02 |
| Change | | Revision | V2.3 | Order Number: | LE632589 | | Page: |
| Print Date | 10-10-2019 | Project | | Production Number: | 3765386 | Project Description: Durand MSP 6040 | =MSP6040 605 |

-16DO10
6ES7132-4BF00-0AA0

| Lamp initial position | Lamp Automatic mode | Lamp Cleaning mode | Lamp Alarm | Home Y-axis Saw side up/down | Home YB-axis Backarm up/down | Home X-axis Translation | Home Z-axis In/out |
|---|---|---|---|---|---|---|---|
| Q1.0 | Q1.1 | Q1.2 | Q0.0 | Q1.4 | Q1.5 | Q1.6 | Q1.7 |
| 1 | 5 | 2 | 6 | 3 | 7 | 4 | 8 |

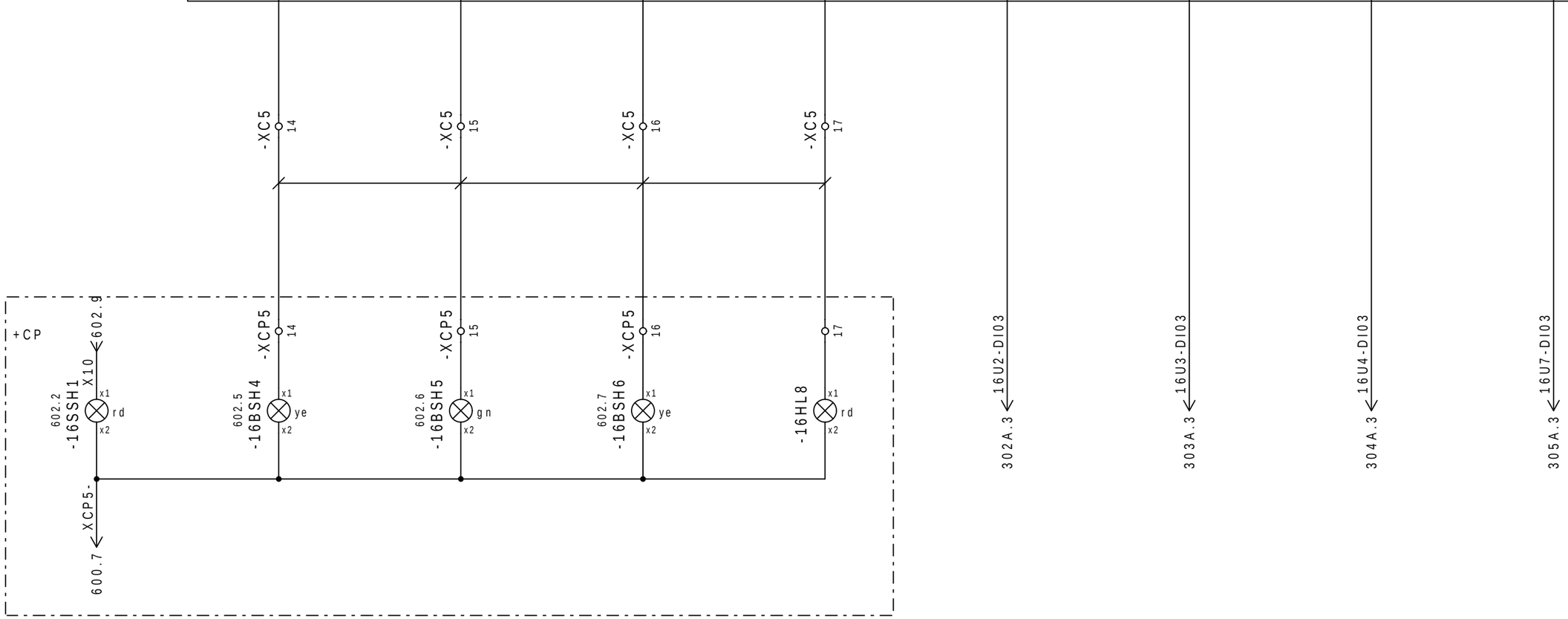

-16DO11
6ES7132-4BF00-0AA0

| Saw hot water | Ham protection OPTION | Telescopic beam 1 | Telescopic beam 2 | Gripping valve | Ungripping valve | Back pressure valve | Back arm hot water |
|---|---|---|---|---|---|---|---|
| Q2.0 | Q2.1 | Q2.2 | Q2.3 | Q2.4 | Q2.5 | Q2.6 | Q2.7 |
| 1 | 5 | 2 | 6 | 3 | 7 | 4 | 8 |

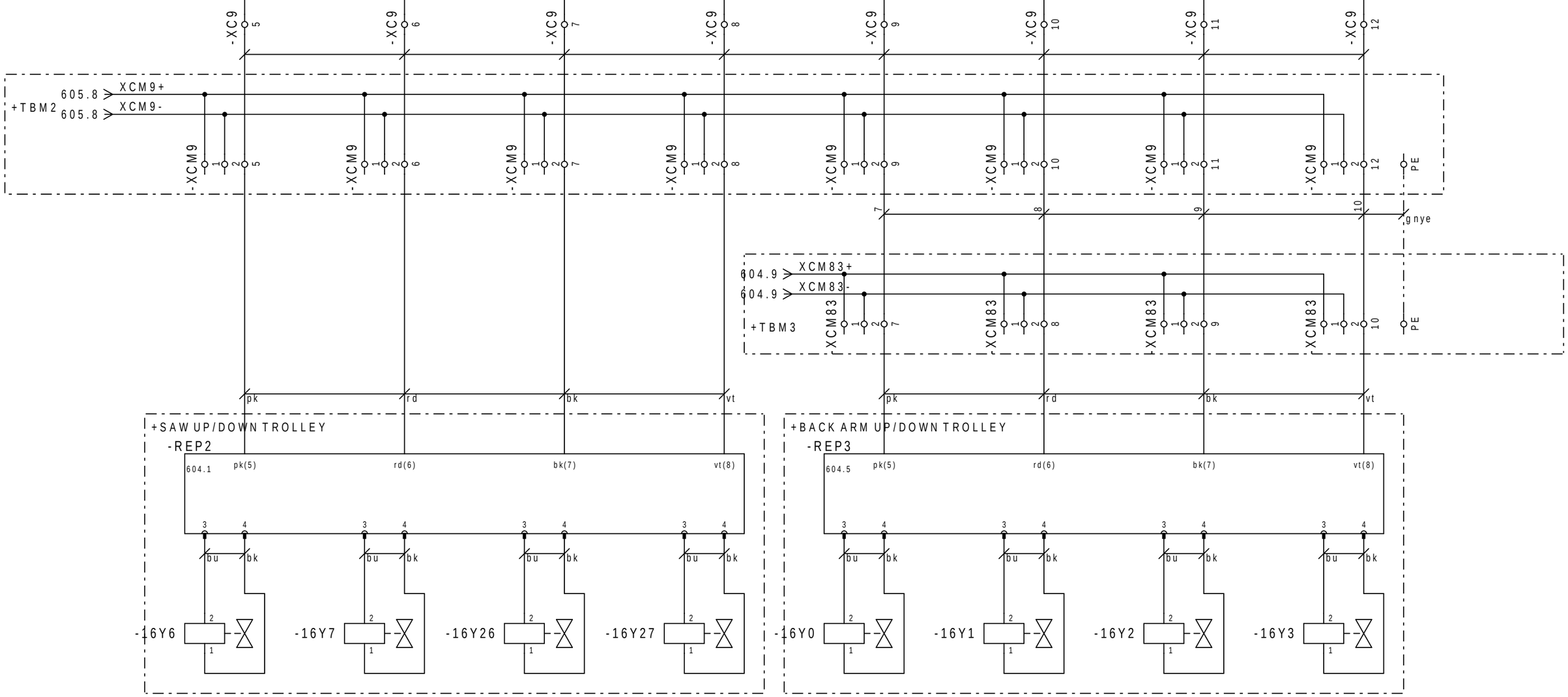

# Detail brake connection Motor + SR11

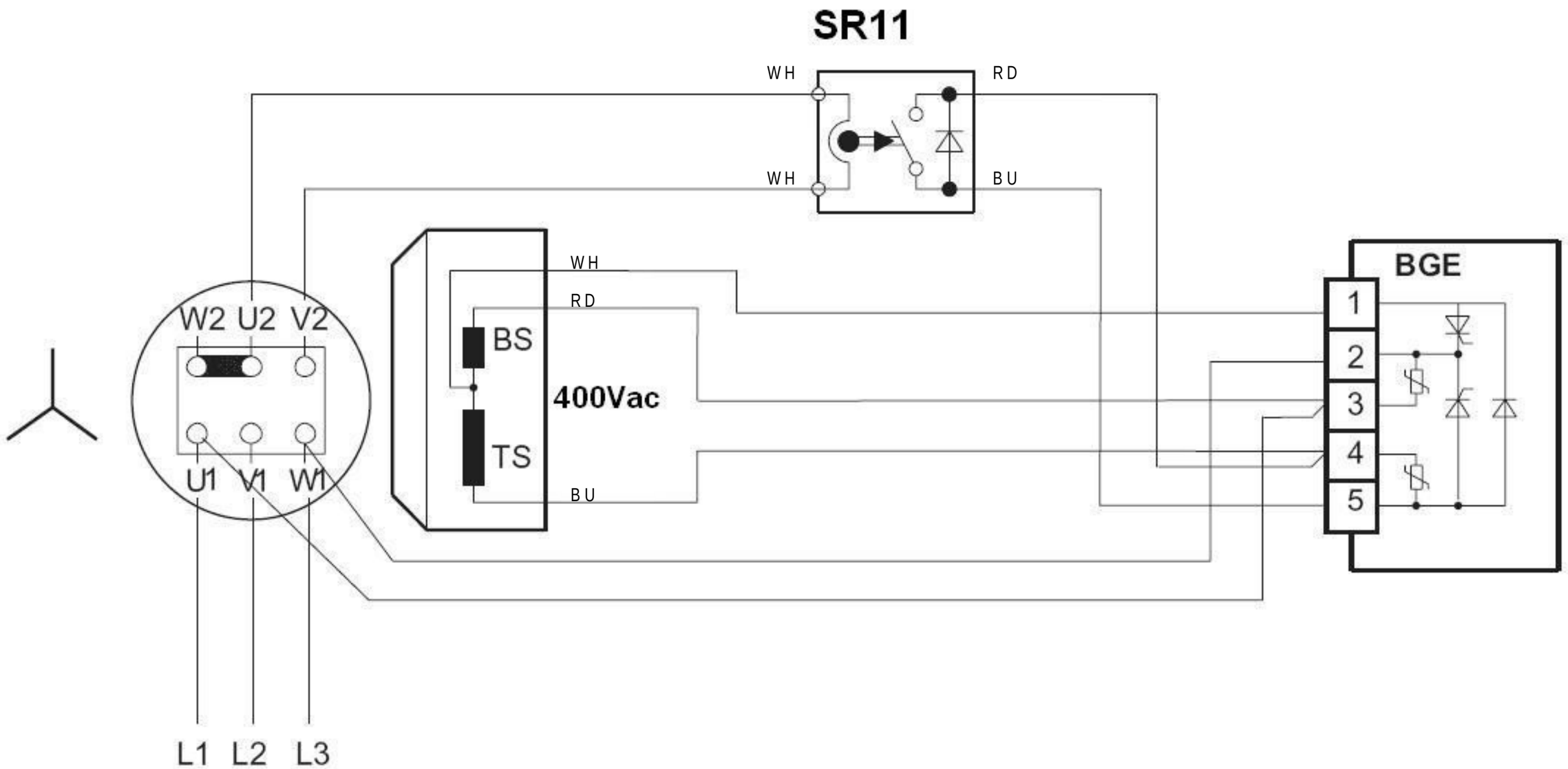


# Beware! Remove connection U2-V2

| | | | | | | | |
|---|---|---|---|---|---|---|---|
| ←607 | | | | | | | 2996→ |
| Start | 02-08-2019 | Engineer | WTH | Castrolanda | | Detail brake connection Motor + SR11 | CASCOL02 |
| Change | | Revision | V2.3 | Order Number: | LE632589 | | Page: |
| Print Date | 10-10-2019 | Project | | Production Number: | 3765386 | Project Description: Durand MSP 6040 | =MSP6040 2995 |

For patch cables, the wiring diagram that is used most often for best performance with ethernet is wiring diagram EIA/TIA 568 B.
Wirig diagram as drawn here.

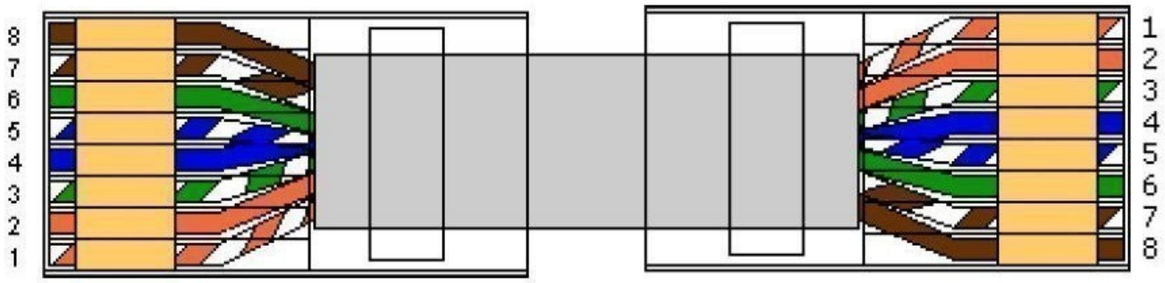


| Pin | | Color |
|---|---|---|
| 1 | T2 | White/Orange |
| 2 | R2 | Orange |
| 3 | T3 | White/Green |
| 4 | R1 | Blue |
| 5 | T1 | White/Blue |
| 6 | R3 | Green |
| 7 | T4 | White/Brown |
| 8 | R4 | Brown |

CONNECTION

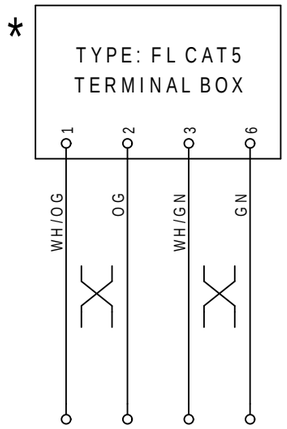


UTP Cable
Wire colors

CONNECTION

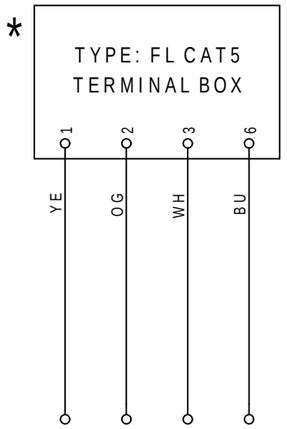


PROFINET Cable
Wire colors

BK=Black / BN=Brown / RD=Red / OG=Orange / YE=Yellow / GN=Green / BU=Blue / VT=Violet / GY=Grey / WH=White / PK=Pink / SH=Shield

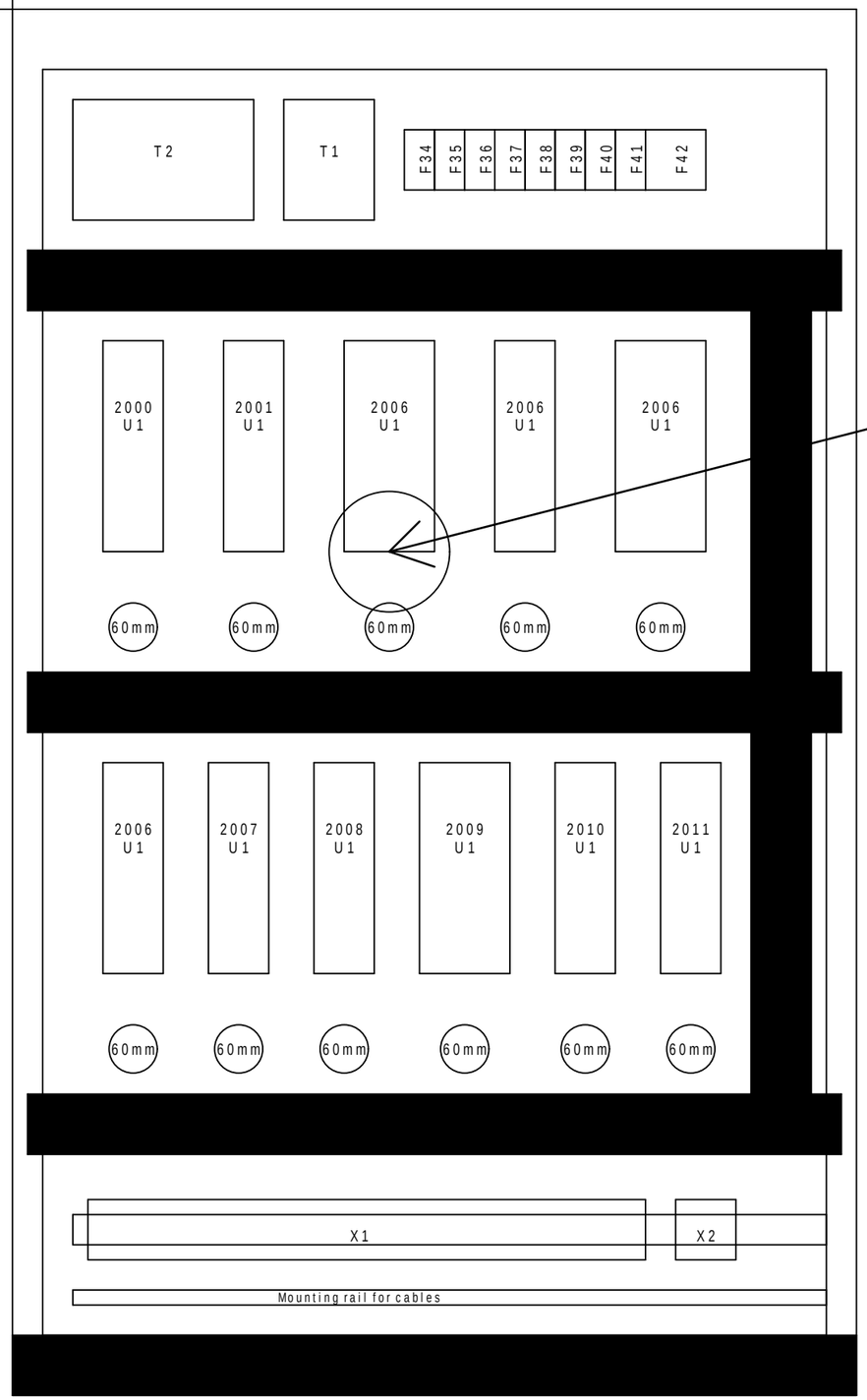


# Detail drawing

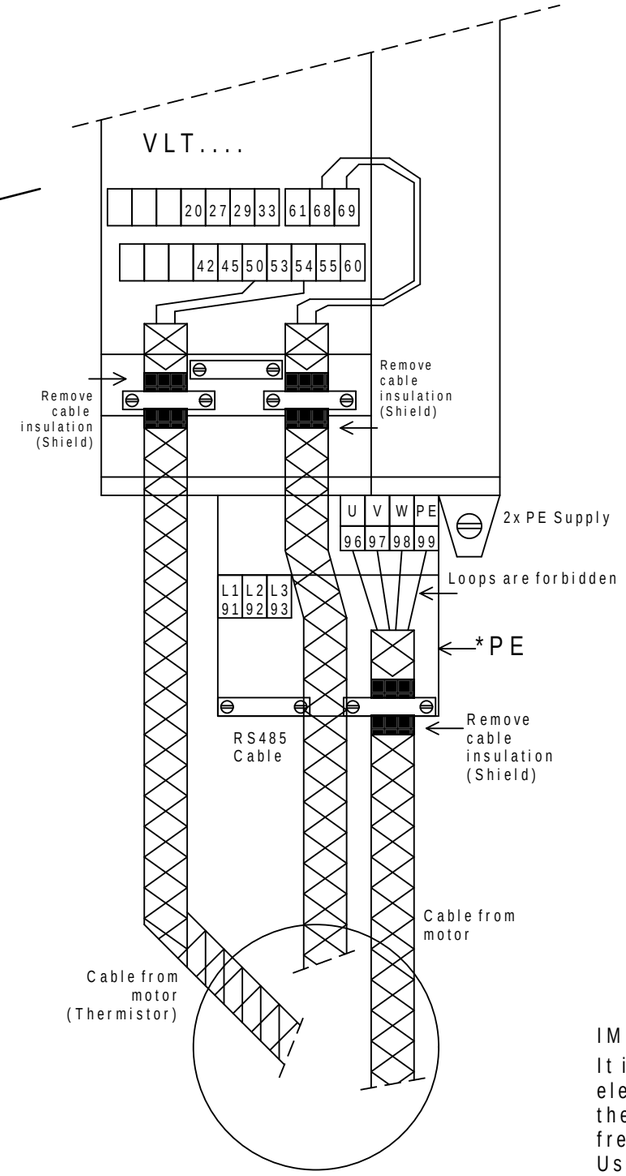


IMPORTANT:

It is important to make sure that there is a propper electrical connection between the metal chassis of the frequency controller and the mounting plate the frequency controller is mounted on.
Use star-spring-rings and galvanic guiding mountingplates for propper connection.

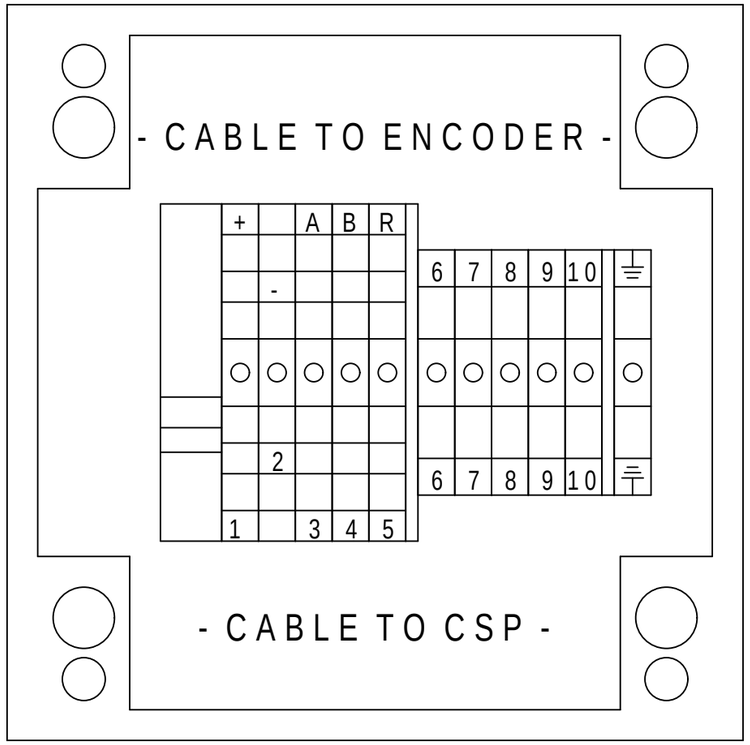


VERSION 14-12-2010

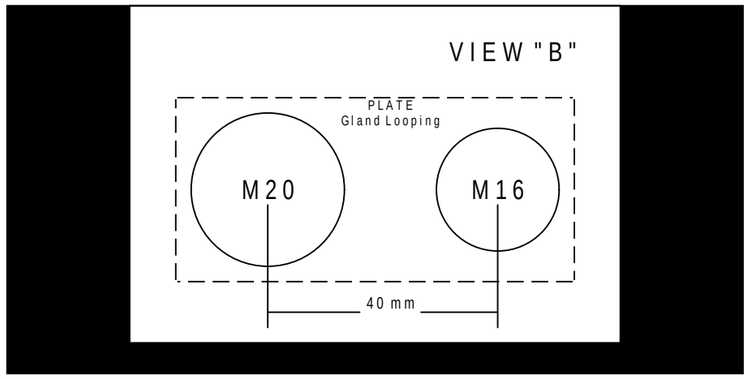


PHOENIX TERMINAL MATERIAL MPS ID 744558000

| | |
|---|---|
| TERMINAL BOX | : ROLEC PK121 (120x120x90mm) |
| END CAP | : CLIPFIX 35 - 3022218 |
| TERMINALS 1-3-4-5 | : UKK 5-LA24-RD/U-0 |
| TERMINALS 2 | : UKK 5 |
| TERMINALS 6-10 | : UK5N |
| GROUND TERMINALS | : USLKG5 - 0441504 |
| FIXED BRIDGE | : FBI 10-6 |
| GLA ND + NUT | : EMC 1xM20 Long Tap |
| GLAND + NUT | : EMC 1xM16 Long Tap |
| PLATE | : Gland Looping |
| REMARK | : ICON ON LID |

IDNUMBER ROTATION ENCODER
755755000 or 755756000 [IVO typeGE355]

| TERMINAL-NUMBER | COLOUR | FARBE | COLOR | KLEUR |
|---|---|---|---|---|
| +(1) | BN/GN | BN/GN | BN/GN | BN/GN |
| -(2) | WH/GN | WH/GN | WH/GN | WH/GN |
| A(3) | BROWN | BRAUN | MARRON | BRUIN |
| B(4) | GREY | GRAU | GRIS | GRIJS |
| R(5) | RED | ROT | ROJO | ROOD |
| A-(6) | GREEN | GRÜN | VERDE | GROEN |
| B-(7) | PINK | ROSA | ROSA | ROZE |
| R-(8) | BLACK | SCHWARZ | NOIR | ZWART |
| 9 | BLUE | BLAU | AZUL | BLAUW |
| 10 | WHITE | WEIB | BLANCO | WIT |
| PE(11) | NC | NC | NC | NC |

Detail A

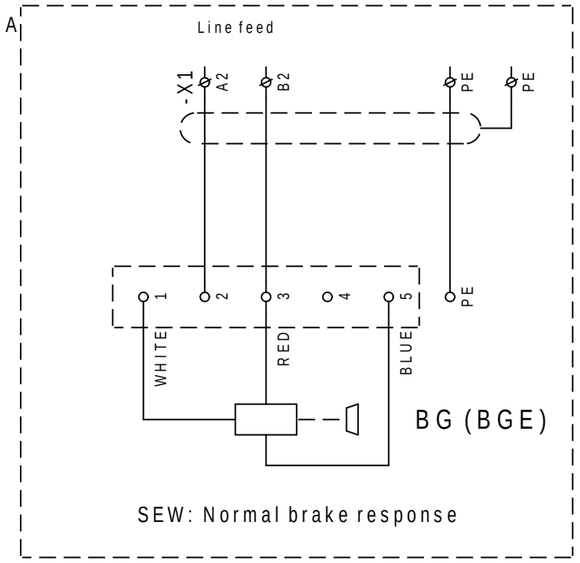


SEW: Normal brake response

Detail C

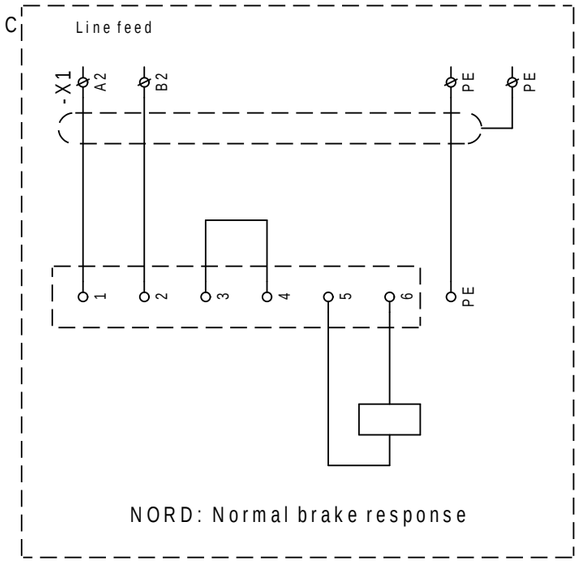


NORD: Normal brake response

Detail E

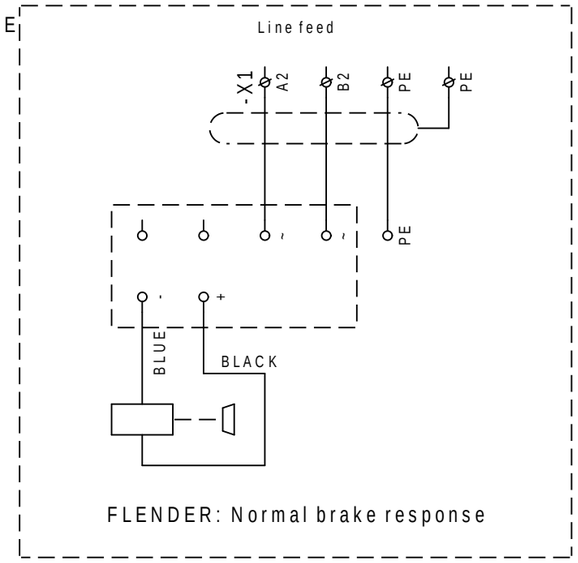


FLENDER: Normal brake response

Detail B

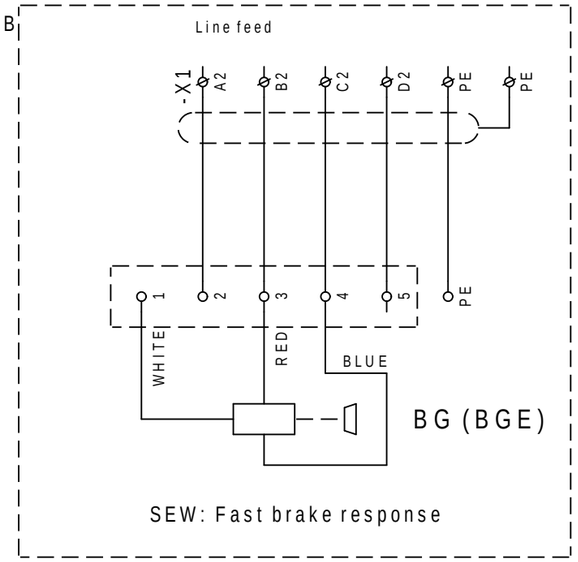


SEW: Fast brake response

Detail D

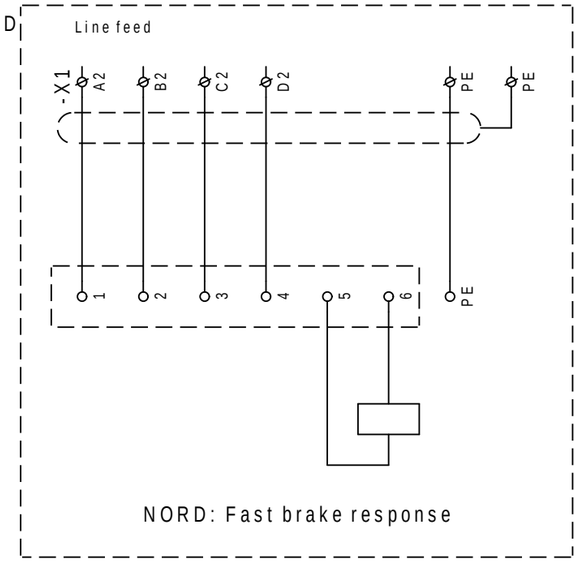


NORD: Fast brake response

Detail F

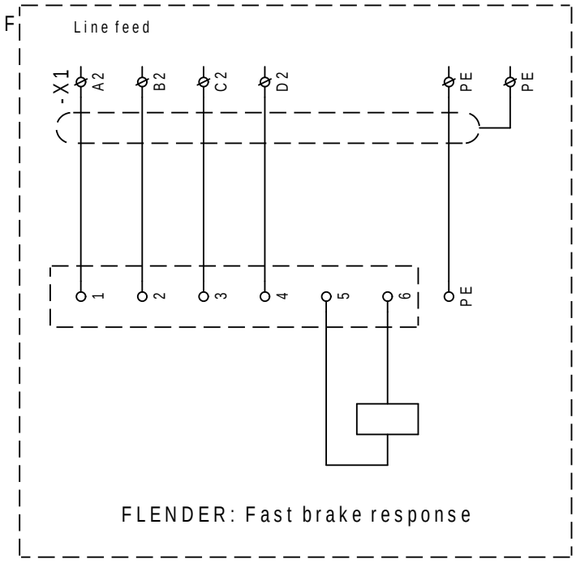


FLENDER: Fast brake response

=MSP6040

| -W16B20 | X home | | | | | m | |
|---|---|---|---|---|---|---|---|
| Target from | mm² | CORE | Core color | Target to: | | Page | Path |
| +TBM2-XCM8:6/1 | | 1 | wh | +MACHINE FRAME-16B20:wh | | 601 | 7 |
| +TBM2-XCM8:6/6 | | 2 | bk | +MACHINE FRAME-16B20:bk | | 601 | 7 |

| -W16B21 | X End switch | | | | | m | |
|---|---|---|---|---|---|---|---|
| Target from | mm² | CORE | Core color | Target to: | | Page | Path |
| +TBM2-XCM8:7/1 | | 1 | wh | +MACHINE FRAME-16B21:bk | | 601 | 8 |
| +TBM2-XCM8:7/7 | | 2 | bk | +MACHINE FRAME-16B21:wh | | 601 | 8 |

| -W16BS10 | Saw side PB skip hog | | | | | m | |
|---|---|---|---|---|---|---|---|
| Target from | mm² | CORE | Core color | Target to: | | Page | Path |
| +TBM2-XCM8:11/1 | | 1 | | +DRESSING LINE-16BS10:14 | | 603 | 4 |
| +TBM2-XCM8:11/11 | | 2 | | +DRESSING LINE-16BS10:13 | | 603 | 4 |

| -W16FR1 | Saw side Measurement laser - receiver | | | | | m | |
|---|---|---|---|---|---|---|---|
| Target from | mm² | CORE | Core color | Target to: | | Page | Path |
| +TBM2-XCM8:12/1 | | 1 | bn | +SAW SIDE FRAME-16FR1:1 | | 603 | 5 |
| +TBM2-XCM8:12/2 | | 2 | bu | +SAW SIDE FRAME-16FR1:3 | | 603 | 5 |
| +TBM2-XCM8:12/12 | | 3 | bk | +SAW SIDE FRAME-16FR1:4 | | 603 | 5 |

| -W16FT1 | Saw side Measurement laser - transmitter | | | | | m | |
|---|---|---|---|---|---|---|---|
| Target from | mm² | CORE | Core color | Target to: | | Page | Path |
| +TBM3-XCM83:6/1 | | 1 | bn | +BACK ARM FRAME-16FT1:1 | | 604 | 9 |
| +TBM3-XCM83:6/2 | | 2 | bu | +BACK ARM FRAME-16FT1:3 | | 604 | 9 |

| -W16LS0 | Saw side Hook 1 (If hook line) | | | | | m | |
|---|---|---|---|---|---|---|---|
| Target from | mm² | CORE | Core color | Target to: | | Page | Path |
| +TBM2-XCM8:8/1 | | 1 | | +DRESSING LINE-16LS0:2 | | 603 | 1 |
| +TBM2-XCM8:8/8 | | 2 | | +DRESSING LINE-16LS0:1 | | 603 | 1 |

| -W16LS1 | Saw side Hook 2 (If hook line) gambrel limit switch | | | | | m | |
|---|---|---|---|---|---|---|---|
| Target from | mm² | CORE | Core color | Target to: | | Page | Path |
| +TBM2-XCM8:9/1 | | 1 | | +DRESSING LINE-16LS1:2 | | 603 | 2 |
| +TBM2-XCM8:9/9 | | 2 | | +DRESSING LINE-16LS1:1 | | 603 | 2 |

| -W16LS2 | Saw side Conveyor pitch | | | | | m | |
|---|---|---|---|---|---|---|---|
| Target from | mm² | CORE | Core color | Target to: | | Page | Path |
| +TBM2-XCM8:10/1 | | 1 | | +DRESSING LINE-16LS2:2 | | 603 | 3 |
| +TBM2-XCM8:10/10 | | 2 | | +DRESSING LINE-16LS2:1 | | 603 | 3 |

=MSP6040

| -W16M1 | Saw motor | | | 755344000 | OLFLEX SERVO FD 796CP - 4G2,5 mm² | 7 m | |
|---|---|---|---|---|---|---|---|
| Target from | mm² | CORE | Core color | Target to: | | Page | Path |
| +TBM1-X16M1:1/U1 | 2.5 | 1 | bk | -16M1:U1 | | 301 | 2 |
| +TBM1-X16M1:2/V1 | 2.5 | 2 | bk | -16M1:V1 | | 301 | 2 |
| +TBM1-X16M1:3/W1 | 2.5 | 3 | bk | -16M1:W1 | | 301 | 2 |
| +TBM1-X16M1:4/PE | 2.5 | 4 | gnye | -16M1:PE | | 301 | 2 |

| -W16M2 | Saw up/down motor | | | 758630000 | OLFLEX SERVO FD 796CP - 4G6 mm² | 7 m | |
|---|---|---|---|---|---|---|---|
| Target from | mm² | CORE | Core color | Target to: | | Page | Path |
| +TBM1-X16M2:1/U2 | 6 | 1 | bk | -16M2:U1 | | 302 | 2 |
| +TBM1-X16M2:2/V2 | 6 | 2 | bk | -16M2:V1 | | 302 | 2 |
| +TBM1-X16M2:3/W2 | 6 | 3 | bk | -16M2:W1 | | 302 | 2 |
| +TBM1-X16M2:4/PE | 6 | 4 | gnye | -16M2:PE | | 302 | 2 |

| -W16M3 | Back arm up/down motor | | | 758487000 | OLFLEX SERVO FD 796CP - 4G4 mm² | 10 m | |
|---|---|---|---|---|---|---|---|
| Target from | mm² | CORE | Core color | Target to: | | Page | Path |
| +TBM3-X16M3:1/U3 | 4 | 1 | bk | -16M3:U1 | | 303 | 2 |
| +TBM3-X16M3:2/V3 | 4 | 2 | bk | -16M3:V1 | | 303 | 2 |
| +TBM3-X16M3:3/W3 | 4 | 3 | bk | -16M3:W1 | | 303 | 2 |
| +TBM3-X16M3:4/PE | 4 | 4 | gnye | -16M3:PE | | 303 | 2 |

| -W16M4 | Saw side up motor | | | 755344000 | OLFLEX SERVO FD 796CP - 4G2,5 mm² | 7 m | |
|---|---|---|---|---|---|---|---|
| Target from | mm² | CORE | Core color | Target to: | | Page | Path |
| +TBM1-X16M4:1/U4 | 2.5 | 1 | bk | -16M4:U1 | | 304 | 1 |
| +TBM1-X16M4:2/V4 | 2.5 | 2 | bk | -16M4:V1 | | 304 | 1 |
| +TBM1-X16M4:3/W4 | 2.5 | 3 | bk | -16M4:W1 | | 304 | 1 |
| +TBM1-X16M4:4/PE | 2.5 | 4 | gnye | -16M4:PE | | 304 | 1 |

| -W16M5 | Saw side down motor | | | 755344000 | OLFLEX SERVO FD 796CP - 4G2,5 mm² | 7 m | |
|---|---|---|---|---|---|---|---|
| Target from | mm² | CORE | Core color | Target to: | | Page | Path |
| +TBM1-X16M4:2/U5 | 2.5 | 1 | bk | -16M5:W1 | | 304 | 2 |
| +TBM1-X16M4:2/V5 | 2.5 | 2 | bk | -16M5:V1 | | 304 | 2 |
| +TBM1-X16M4:2/W5 | 2.5 | 3 | bk | -16M5:U1 | | 304 | 2 |
| +TBM1-X16M4:4/PE | 2.5 | 4 | gnye | -16M5:PE | | 304 | 2 |

| -W16M6 | Back arm motor | | | 755344000 | OLFLEX SERVO FD 796CP - 4G2,5 mm² | 7 m | |
|---|---|---|---|---|---|---|---|
| Target from | mm² | CORE | Core color | Target to: | | Page | Path |
| +TBM1-X16M4:3/U6 | 2.5 | 1 | bk | -16M6:W1 | | 304 | 3 |
| +TBM1-X16M4:3/V6 | 2.5 | 2 | bk | -16M6:V1 | | 304 | 3 |
| +TBM1-X16M4:3/W6 | 2.5 | 3 | bk | -16M6:U1 | | 304 | 3 |
| +TBM1-X16M4:3/PE | 2.5 | 4 | gnye | -16M6:PE | | 304 | 3 |

=MSP6040

| -W16M6 | Back arm motor | | | 755344000 | OLFLEX SERVO FD 796CP - 4G2,5 mm² | 7 m | |
|---|---|---|---|---|---|---|---|
| Target from | mm² | CORE | Core color | Target to: | | Page | Path |
| | 2.5 | 4 | gnye | | | | |

| -W16M7 | Head in/out motor | | | 755344000 | OLFLEX SERVO FD 796CP - 4G2,5 mm² | 7 m | |
|---|---|---|---|---|---|---|---|
| Target from | mm² | CORE | Core color | Target to: | | Page | Path |
| +TBM1-X16M7:1/U7 | 2.5 | 1 | bk | -16M7:U1 | | 305 | 2 |
| +TBM1-X16M7:2/V7 | 2.5 | 2 | bk | -16M7:V1 | | 305 | 2 |
| +TBM1-X16M7:3/W7 | 2.5 | 3 | bk | -16M7:W1 | | 305 | 2 |
| +TBM1-X16M7:4/PE | 2.5 | 4 | gnye | -16M7:PE | | 305 | 2 |

| -W16MBY2 | Saw up/down motor brake | | | 755344000 | OLFLEX SERVO FD 796CP - 4G2,5 mm² | 7 m | |
|---|---|---|---|---|---|---|---|
| Target from | mm² | CORE | Core color | Target to: | | Page | Path |
| +TBM1-X16M2:1/1 | 2.5 | 1 | bk | -16MBY2:rd | | 302 | 1 |
| +TBM1-X16M2:2/2 | 2.5 | 2 | bk | -16MBY2:wh | | 302 | 1 |
| +TBM1-X16M2:3/3 | 2.5 | 3 | bk | -16MBY2:bu | | 302 | 1 |
| +TBM1-X16M2:4/PE | 2.5 | 4 | gnye | | | | |

| -W16MBY3 | Back arm up/down motor brake | | | 755344000 | OLFLEX SERVO FD 796CP - 4G2,5 mm² | 7 m | |
|---|---|---|---|---|---|---|---|
| Target from | mm² | CORE | Core color | Target to: | | Page | Path |
| +TBM3-X16M3:1/1 | 2.5 | 1 | bk | -16MBY3:rd | | 303 | 1 |
| +TBM3-X16M3:2/2 | 2.5 | 2 | bk | -16MBY3:wh | | 303 | 1 |
| +TBM3-X16M3:3/3 | 2.5 | 3 | bk | -16MBY3:bu | | 303 | 1 |
| +TBM3-X16M3:4/PE | 2.5 | 4 | gnye | | | | |

| -W16PB4 | Air pressure OK | | | | | m | |
|---|---|---|---|---|---|---|---|
| Target from | mm² | CORE | Core color | Target to: | | Page | Path |
| +TBM2-XCM8:3/1 | | 1 | | +MACHINE FRAME-16PB4:1 | | 601 | 4 |
| +MACHINE FRAME-16PB4:3 | | 2 | | +TBM2-XCM8:3/3 | | 601 | 4 |

| -W16REP2 | Distribution block REP2 - Saw up/down trolley | | | | | m | |
|---|---|---|---|---|---|---|---|
| Target from | mm² | CORE | Core color | Target to: | | Page | Path |
| +TBM2-XCM8:13/1 | | 1 | bn | +SAW UP/DOWN TROLLEY-REP2:bn(C1) | | 604 | 1 |
| +TBM2-XCM8:13/2 | | 2 | bu | +SAW UP/DOWN TROLLEY-REP2:bu(C3) | | 604 | 1 |
| +TBM2-XCM8:13/13 | | 3 | wh | +SAW UP/DOWN TROLLEY-REP2:wh | | 604 | 1 |
| +TBM2-XCM8:14/14 | | 4 | gn | +SAW UP/DOWN TROLLEY-REP2:gn | | 604 | 2 |
| +TBM2-XCM8:15/15 | | 5 | ye | +SAW UP/DOWN TROLLEY-REP2:ye | | 604 | 3 |
| +TBM2-XCM8:16/16 | | 6 | gy | +SAW UP/DOWN TROLLEY-REP2:gy | | 604 | 4 |
| +TBM2-XCM9:5/5 | | 7 | pk | +SAW UP/DOWN TROLLEY-REP2:pk(5) | | 607 | 1 |
| +TBM2-XCM9:6/6 | | 8 | rd | +SAW UP/DOWN TROLLEY-REP2:rd(6) | | 607 | 2 |
| +TBM2-XCM9:7/7 | | 9 | bk | +SAW UP/DOWN TROLLEY-REP2:bk(7) | | 607 | 3 |
| +TBM2-XCM9:8/8 | | 10 | vt | +SAW UP/DOWN TROLLEY-REP2:vt(8) | | 607 | 4 |

=MSP6040

| -W16REP3 | Distribution block REP3 - Arm up/down trolley | | | | | m | |
|---|---|---|---|---|---|---|---|
| Target from | mm² | CORE | Core color | Target to: | | Page | Path |
| +TBM3-XCM83:3/1 | | 1 | bn | +BACK ARM UP/DOWN TROLLEY-REP3:bn(C1) | | 604 | 5 |
| +TBM3-XCM83:3/2 | | 2 | bu | +BACK ARM UP/DOWN TROLLEY-REP3:bu(C3) | | 604 | 5 |
| +TBM3-XCM83:3/3 | | 3 | wh | +BACK ARM UP/DOWN TROLLEY-REP3:wh | | 604 | 5 |
| +TBM3-XCM83:4/4 | | 4 | gn | +BACK ARM UP/DOWN TROLLEY-REP3:gn | | 604 | 6 |
| +TBM3-XCM83:5/5 | | 5 | ye | +BACK ARM UP/DOWN TROLLEY-REP3:ye | | 604 | 7 |
| +TBM3-XCM83:6/6 | | 6 | gy | +BACK ARM UP/DOWN TROLLEY-REP3:gy | | 604 | 8 |
| +TBM3-XCM83:7/7 | | 7 | pk | +BACK ARM UP/DOWN TROLLEY-REP3:pk(5) | | 607 | 5 |
| +TBM3-XCM83:8/8 | | 8 | rd | +BACK ARM UP/DOWN TROLLEY-REP3:rd(6) | | 607 | 6 |
| +TBM3-XCM83:9/9 | | 9 | bk | +BACK ARM UP/DOWN TROLLEY-REP3:bk(7) | | 607 | 7 |
| +TBM3-XCM83:10/10 | | 10 | vt | +BACK ARM UP/DOWN TROLLEY-REP3:vt(8) | | 607 | 8 |

| -W16RES2 | Saw up/down motor resolver | | | 746754000 | UNITRONIC FD CP (TP) plus - 4x2x0,5 mm² | 7 m | |
|---|---|---|---|---|---|---|---|
| Target from | mm² | CORE | Core color | Target to: | | Page | Path |
| +TBM1-X16EM2:8/8 | 0.5 | 1 | wh | -16RES2:10 | | 302 | 6 |
| +TBM1-X16EM2:8/7 | 0.5 | 2 | bn | -16RES2:9 | | 302 | 6 |
| +TBM1-X16EM2:6/6 | 0.5 | 3 | gn | -16RES2:6 | | 302 | 5 |
| +TBM1-X16EM2:6/5 | 0,5 | 4 | ye | -16RES2:5 | | 302 | 5 |
| +TBM1-X16EM2:2/2 | 0.5 | 5 | gy | -16RES2:2 | | 302 | 4 |
| +TBM1-X16EM2:2/1 | 0.5 | 6 | pk | -16RES2:1 | | 302 | 4 |
| +TBM1-X16EM2:4/4 | 0.5 | 7 | bu | -16RES2:4 | | 302 | 5 |
| +TBM1-X16EM2:4/3 | 0,5 | 8 | rd | -16RES2:3 | | 302 | 5 |

| -W16RES3 | Back arm up/down motor resolver | | | 746754000 | UNITRONIC FD CP (TP) plus - 4x2x0,5 mm² | 10 m | |
|---|---|---|---|---|---|---|---|
| Target from | mm² | CORE | Core color | Target to: | | Page | Path |
| +TBM3-X16EM3:8/8 | 0.5 | 1 | wh | -16RES3:10 | | 303 | 6 |
| +TBM3-X16EM3:8/7 | 0.5 | 2 | bn | -16RES3:9 | | 303 | 6 |
| +TBM3-X16EM3:6/6 | 0.5 | 3 | gn | -16RES3:6 | | 303 | 5 |
| +TBM3-X16EM3:6/5 | 0,5 | 4 | ye | -16RES3:5 | | 303 | 5 |
| +TBM3-X16EM3:2/2 | 0.5 | 5 | gy | -16RES3:2 | | 303 | 4 |
| +TBM3-X16EM3:2/1 | 0.5 | 6 | pk | -16RES3:1 | | 303 | 4 |
| +TBM3-X16EM3:4/4 | 0.5 | 7 | bu | -16RES3:4 | | 303 | 5 |
| +TBM3-X16EM3:4/3 | 0,5 | 8 | rd | -16RES3:3 | | 303 | 5 |

| -W16RES4 | Translation encoder | | | 746754000 | UNITRONIC FD CP (TP) plus - 4x2x0,5 mm² | 7 m | |
|---|---|---|---|---|---|---|---|
| Target from | mm² | CORE | Core color | Target to: | | Page | Path |
| +TBM1-X16EM4:6/6 | 0.5 | 1 | wh | -16RES4:/C | | 304 | 8 |
| +TBM1-X16EM4:6/5 | 0.5 | 2 | bn | -16RES4:C | | 304 | 8 |
| +TBM1-X16EM4:4/4 | 0.5 | 3 | gn | -16RES4:/B | | 304 | 7 |
| +TBM1-X16EM4:4/3 | 0,5 | 4 | ye | -16RES4:B | | 304 | 7 |
| +TBM1-X16EM4:8/8 | 0.5 | 5 | gy | -16RES4:UB | | 304 | 9 |
| +TBM1-X16EM4:8/7 | 0.5 | 6 | pk | -16RES4:GND | | 304 | 8 |
| +TBM1-X16EM4:2/2 | 0.5 | 7 | bu | -16RES4:/A | | 304 | 7 |
| +TBM1-X16EM4:2/1 | 0,5 | 8 | rd | -16RES4:A | | 304 | 7 |

=MSP6040

| -W16RES7 | Saw in/out resolver | | | 746754000 | UNITRONIC FD CP (TP) plus - 4x2x0,5 mm² | 7 m | |
|---|---|---|---|---|---|---|---|
| Target from | mm² | CORE | Core color | Target to: | | Page | Path |
| +TBM1-X16EM7:8/8 | 0.5 | 1 | wh | -16RES7:10 | | 305 | 6 |
| +TBM1-X16EM7:8/7 | 0.5 | 2 | bn | -16RES7:9 | | 305 | 6 |
| +TBM1-X16EM7:6/6 | 0.5 | 3 | gn | -16RES7:6 | | 305 | 5 |
| +TBM1-X16EM7:6/5 | 0,5 | 4 | ye | -16RES7:5 | | 305 | 5 |
| +TBM1-X16EM7:2/2 | 0.5 | 5 | gy | -16RES7:2 | | 305 | 4 |
| +TBM1-X16EM7:2/1 | 0.5 | 6 | pk | -16RES7:1 | | 305 | 4 |
| +TBM1-X16EM7:4/4 | 0.5 | 7 | bu | -16RES7:4 | | 305 | 5 |
| +TBM1-X16EM7:4/3 | 0,5 | 8 | rd | -16RES7:3 | | 305 | 5 |

| -W16Y4 | Main air valve | | | | | m | |
|---|---|---|---|---|---|---|---|
| Target from | mm² | CORE | Core color | Target to: | | Page | Path |
| +TBM2-XCM9:3/3 | | 1 | bk | +MACHINE FRAME-16Y4:1 | | 605 | 6 |
| +TBM2-XCM9:3/2 | | 2 | bu | +MACHINE FRAME-16Y4:2 | | 605 | 6 |

| -W16Y5 | Saw cold water | | | | | m | |
|---|---|---|---|---|---|---|---|
| Target from | mm² | CORE | Core color | Target to: | | Page | Path |
| +TBM2-XCM9:4/4 | | 1 | bk | +MACHINE FRAME-16Y5:1 | | 605 | 7 |
| +TBM2-XCM9:4/2 | | 2 | bu | +MACHINE FRAME-16Y5:2 | | 605 | 7 |

| -WC1 | Power supply | | | | | m | |
|---|---|---|---|---|---|---|---|
| Target from | mm² | CORE | Core color | Target to: | | Page | Path |
| -X0:1/L1 | | 1 | | -CSP:L1 | | 100 | 1 |
| -X0:2/L2 | | 2 | | -CSP:L2 | | 100 | 1 |
| -X0:3/L3 | | 3 | | -CSP:L3 | | 100 | 1 |
| -X0:5/PE | | 4 | | -CSP:PE | | 100 | 1 |

| -WC2 | Junction box TBM1 - Saw up/down motor brake | | | 757101000 | OLFLEX CLASSIC 110 CY BLACK - 4G2,5 mm² | m | |
|---|---|---|---|---|---|---|---|
| Target from | mm² | CORE | Core color | Target to: | | Page | Path |
| -X16U2:1/1 | 2.5 | 1 | bk | +TBM1-X16M2:1/1 | | 302 | 1 |
| -X16U2:2/2 | 2.5 | 2 | bk | +TBM1-X16M2:2/2 | | 302 | 1 |
| -X16U2:3/3 | 2.5 | 3 | bk | +TBM1-X16M2:3/3 | | 302 | 1 |
| -X16U2:4/PE | 2.5 | 4 | gnye | +TBM1-X16M2:4/PE | | 302 | 1 |

| -WC3 | Junction box TBM1 - Head in/out motor | | | 757101000 | OLFLEX CLASSIC 110 CY BLACK - 4G2,5 mm² | m | |
|---|---|---|---|---|---|---|---|
| Target from | mm² | CORE | Core color | Target to: | | Page | Path |
| -16U7:4 | 2.5 | 1 | bk | +TBM1-X16M7:1/U7 | | 305 | 2 |
| -16U7:5 | 2.5 | 2 | bk | +TBM1-X16M7:2/V7 | | 305 | 2 |
| -16U7:6 | 2.5 | 3 | bk | +TBM1-X16M7:3/W7 | | 305 | 2 |
| -16U7 | 2.5 | 4 | gnye | +TBM1-X16M7:4/PE | | 305 | 2 |

=MSP6040

| -WC3 | Junction box TBM1 - Head in/out motor | | | 757101000 | OLFLEX CLASSIC 110 CY BLACK - 4G2,5 mm² | m | |
|---|---|---|---|---|---|---|---|
| Target from | mm² | CORE | Core color | Target to: | | Page | Path |
| | 2.5 | 4 | gnye | | | | |

| -WC4 | Junction box TBM1 - Translation motors | | | 757101000 | OLFLEX CLASSIC 110 CY BLACK - 4G2,5 mm² | m | |
|---|---|---|---|---|---|---|---|
| Target from | mm² | CORE | Core color | Target to: | | Page | Path |
| -16U4:4 | 2.5 | 1 | bk | +TBM1-X16M4:1/U4 | | 304 | 2 |
| -16U4:5 | 2.5 | 2 | bk | +TBM1-X16M4:2/V4 | | 304 | 2 |
| -16U4:6 | 2.5 | 3 | bk | +TBM1-X16M4:3/W4 | | 304 | 2 |
| -16U4 | 2.5 | 4 | gnye | +TBM1-X16M4:4/PE | | 304 | 2 |

| -WC5 | Control Panel | | | 789102859 | OLFLEX CLASSIC 110 - 18G1 mm² | m | |
|---|---|---|---|---|---|---|---|
| Target from | mm² | CORE | Core color | Target to: | | Page | Path |
| -XC5:2/1 | 1 | 1 | bk | +CP-XCP5:2/1 | | 120 | 5 |
| -XC5:2/2 | 1 | 2 | bk | +CP-XCP5:2/2 | | 120 | 6 |
| -XC5:4/3 | 1 | 3 | bk | +CP-XCP5:4/3 | | 210 | 2 |
| -XC5:4/4 | 1 | 4 | bk | +CP-XCP5:4/4 | | 210 | 2 |
| -XC5:6/5 | 1 | 5 | bk | +CP-XCP5:6/5 | | 210 | 2 |
| -XC5:6/6 | 1 | 6 | bk | +CP-XCP5:6/6 | | 210 | 2 |
| -XC5:8/7 | 1 | 7 | bk | +CP-XCP5:8/7 | | 602 | 2 |
| -XC5:8/8 | 1 | 8 | bk | +CP-XCP5:8/8 | | 602 | 3 |
| -XC5:10/9 | 1 | 9 | bk | +CP-XCP5:10/9 | | 602 | 4 |
| -XC5:10/10 | 1 | 10 | bk | +CP-XCP5:10/10 | | 602 | 5 |
| -XC5:12/11 | 1 | 11 | bk | +CP-XCP5:12/11 | | 602 | 6 |
| -XC5:12/12 | 1 | 12 | bk | +CP-XCP5:12/12 | | 602 | 7 |
| -XC5:14/13 | 1 | 13 | bk | +CP-XCP5:14/13 | | 602 | 8 |
| -XC5:14/14 | 1 | 14 | bk | +CP-XCP5:14/14 | | 606 | 1 |
| -XC5:16/15 | 1 | 15 | bk | +CP-XCP5:16/15 | | 606 | 2 |
| -XC5:16/16 | 1 | 16 | bk | +CP-XCP5:16/16 | | 606 | 3 |
| -XC5:18/17 | 1 | 17 | bk | +CP-XCP5:18/17 | | 606 | 4 |
| -XC5:50/PE | 1 | 18 | gnye | +CP-XCP5:50/PE | | 120 | 6 |

| -WC6 | Junction box TBM1 - Saw motor | | | 757101000 | OLFLEX CLASSIC 110 CY BLACK - 4G2,5 mm² | m | |
|---|---|---|---|---|---|---|---|
| Target from | mm² | CORE | Core color | Target to: | | Page | Path |
| -16U1:4 | 2.5 | 1 | bk | +TBM1-X16M1:1/U1 | | 301 | 2 |
| -16U1:5 | 2.5 | 2 | bk | +TBM1-X16M1:2/V1 | | 301 | 2 |
| -16U1:6 | 2.5 | 3 | bk | +TBM1-X16M1:3/W1 | | 301 | 2 |
| -16U1 | 2.5 | 4 | gnye | +TBM1-X16M1:4/PE | | 301 | 2 |

| -WC7 | Junction box TBM1 - Saw up/down motor | | | 757103000 | OLFLEX CLASSIC 110 CY BLACK - 4G6 mm² | m | |
|---|---|---|---|---|---|---|---|
| Target from | mm² | CORE | Core color | Target to: | | Page | Path |
| -16U2:4 | 6 | 1 | bk | +TBM1-X16M2:1/U2 | | 302 | 2 |
| -16U2:5 | 6 | 2 | bk | +TBM1-X16M2:2/V2 | | 302 | 2 |
| -16U2:6 | 6 | 3 | bk | +TBM1-X16M2:3/W2 | | 302 | 2 |
| -16U2 | 6 | 4 | gnye | +TBM1-X16M2:4/PE | | 302 | 2 |

=MSP6040

| -WC8 | Junction box TBM2 - cable 1 | | | 746788000 | OLFLEX CLASSIC 110 - 25G1 mm² | m | |
|---|---|---|---|---|---|---|---|
| Target from | mm² | CORE | Core color | Target to: | | Page | Path |
| -XC8:2/1 | 1 | 1 | bk | +TBM2-XCM8:3/1 | | 120 | 6 |
| -XC8:2/2 | 1 | 2 | bk | +TBM2-XCM8:3/2 | | 120 | 6 |
| -XC8:4/3 | 1 | 3 | bk | +TBM2-XCM8:3/3 | | 601 | 4 |
| -XC8:4/4 | 1 | 4 | bk | +TBM2-XCM8:4/4 | | 601 | 5 |
| -XC8:6/5 | 1 | 5 | bk | +TBM2-XCM8:5/5 | | 601 | 6 |
| -XC8:6/6 | 1 | 6 | bk | +TBM2-XCM8:6/6 | | 601 | 7 |
| -XC8:8/7 | 1 | 7 | bk | +TBM2-XCM8:7/7 | | 601 | 8 |
| -XC8:8/8 | 1 | 8 | bk | +TBM2-XCM8:8/8 | | 603 | 1 |
| -XC8:10/9 | 1 | 9 | bk | +TBM2-XCM8:9/9 | | 603 | 2 |
| -XC8:10/10 | 1 | 10 | bk | +TBM2-XCM8:10/10 | | 603 | 3 |
| -XC8:12/11 | 1 | 11 | bk | +TBM2-XCM8:11/11 | | 603 | 4 |
| -XC8:12/12 | 1 | 12 | bk | +TBM2-XCM8:12/12 | | 603 | 5 |
| -XC8:14/13 | 1 | 13 | bk | +TBM2-XCM8:13/13 | | 604 | 1 |
| -XC8:14/14 | 1 | 14 | bk | +TBM2-XCM8:14/14 | | 604 | 2 |
| -XC8:16/15 | 1 | 15 | bk | +TBM2-XCM8:15/15 | | 604 | 3 |
| -XC8:16/16 | 1 | 16 | bk | +TBM2-XCM8:16/16 | | 604 | 4 |
| -XC8:18/17 | 1 | 17 | bk | +TBM2-XCM8:17/17 | | 604 | 5 |
| -XC8:18/18 | 1 | 18 | bk | +TBM2-XCM8:18/18 | | 604 | 6 |
| -XC8:20/19 | 1 | 19 | bk | +TBM2-XCM8:19/19 | | 604 | 7 |
| -XC8:20/20 | 1 | 20 | bk | +TBM2-XCM8:20/20 | | 604 | 8 |
| | 1 | 21 | bk | | | | |
| | 1 | 22 | bk | | | | |
| | 1 | 23 | bk | | | | |
| | 1 | 24 | bk | | | | |
| -XC8:50/PE | 1 | 25 | gnye | +TBM2-XCM8:50/PE | | 120 | 7 |

=MSP6040

| -WC9 | Junction box TBM2 - cable 2 | | | 789102859 | OLFLEX CLASSIC 110 - 18G1 mm² | m | |
|---|---|---|---|---|---|---|---|
| Target from | mm² | CORE | Core color | Target to: | | Page | Path |
| -XC9:2/1 | 1 | 1 | bk | +TBM2-XCM9:3/1 | | 120 | 7 |
| -XC9:2/2 | 1 | 2 | bk | +TBM2-XCM9:3/2 | | 120 | 7 |
| -XC9:4/3 | 1 | 3 | bk | +TBM2-XCM9:3/3 | | 605 | 6 |
| -XC9:4/4 | 1 | 4 | bk | +TBM2-XCM9:4/4 | | 605 | 7 |
| -XC9:6/5 | 1 | 5 | bk | +TBM2-XCM9:5/5 | | 607 | 1 |
| -XC9:6/6 | 1 | 6 | bk | +TBM2-XCM9:6/6 | | 607 | 2 |
| -XC9:8/7 | 1 | 7 | bk | +TBM2-XCM9:7/7 | | 607 | 3 |
| -XC9:8/8 | 1 | 8 | bk | +TBM2-XCM9:8/8 | | 607 | 4 |
| -XC9:10/9 | 1 | 9 | bk | +TBM2-XCM9:9/9 | | 607 | 5 |
| -XC9:10/10 | 1 | 10 | bk | +TBM2-XCM9:10/10 | | 607 | 6 |
| -XC9:12/11 | 1 | 11 | bk | +TBM2-XCM9:11/11 | | 607 | 7 |
| -XC9:12/12 | 1 | 12 | bk | +TBM2-XCM9:12/12 | | 607 | 8 |
| | 1 | 13 | bk | | | | |
| | 1 | 14 | bk | | | | |
| | 1 | 15 | bk | | | | |
| | 1 | 16 | bk | | | | |
| | 1 | 17 | bk | | | | |
| -XC9:50/PE | 1 | 18 | gnye | +TBM2-XCM9:50/PE | | 120 | 7 |

| -WC10 | Dressing line information and on/off control | | | 789102857 | OLFLEX CLASSIC 110 - 7G1 mm² | m | |
|---|---|---|---|---|---|---|---|
| Target from | mm² | CORE | Core color | Target to: | | Page | Path |
| -XA10:2/1 | 1 | 1 | bk | +DRESSING LINE-X:2/1 | | 601 | 2 |
| -XA10:2/2 | 1 | 2 | bk | +DRESSING LINE-X:2/2 | | 601 | 2 |
| -XA10:2/3 | 1 | 3 | bk | +DRESSING LINE-X:2/3 | | 605 | 2 |
| -XA10:2/4 | 1 | 4 | bk | +DRESSING LINE-X:2/4 | | 605 | 2 |
| -XA10:3/5 | 1 | 5 | bk | +DRESSING LINE-X:3/5 | | 605 | 4 |
| -XA10:3/6 | 1 | 6 | bk | +DRESSING LINE-X:3/6 | | 605 | 4 |
| -XA10:4/PE | 1 | 7 | gnye | +DRESSING LINE-X:4/PE | | 605 | 4 |

| -WC11 | Downstream machine | | | 746799000 | OLFLEX CLASSIC 110 - 3G1 mm² | m | |
|---|---|---|---|---|---|---|---|
| Target from | mm² | CORE | Core color | Target to: | | Page | Path |
| -XA11:2/1 | 1 | 1 | bk | +DOWNSTREAM-X:2/1 | | 601 | 3 |
| -XA11:2/2 | 1 | 2 | bk | +DOWNSTREAM-X:2/2 | | 601 | 3 |
| -XA11:3/PE | 1 | 3 | gnye | +DOWNSTREAM-X:3/PE | | 601 | 3 |

| -WC12 | Upstream machine | | | 746799000 | OLFLEX CLASSIC 110 - 3G1 mm² | m | |
|---|---|---|---|---|---|---|---|
| Target from | mm² | CORE | Core color | Target to: | | Page | Path |
| -XA12:1/1 | 1 | 1 | bk | +UPSTREAM-X:-1/3 | | 605 | 5 |
| -XA12:1/2 | 1 | 2 | bk | +UPSTREAM-X:-1/4 | | 605 | 5 |
| -XA12:2/PE | 1 | 3 | gnye | +UPSTREAM-X:1/PE | | 605 | 5 |

=MSP6040

| -WC17 | Junction box TBM3 - Back arm up/down motor brake | | | 757101000 | OLFLEX CLASSIC 110 CY BLACK - 4G2,5 mm² | m | |
|---|---|---|---|---|---|---|---|
| Target from | mm² | CORE | Core color | Target to: | | Page | Path |
| -X16U3:1/1 | 2.5 | 1 | bk | +TBM3-X16M3:1/1 | | 303 | 1 |
| -X16U3:2/2 | 2.5 | 2 | bk | +TBM3-X16M3:2/2 | | 303 | 1 |
| -X16U3:3/3 | 2.5 | 3 | bk | +TBM3-X16M3:3/3 | | 303 | 1 |
| -X16U3:4/PE | 2.5 | 4 | gnye | +TBM3-X16M3:4/PE | | 303 | 1 |

| -WC20 | Junction box TBM4 - Encoder Dressing Line | | | 759775000 | UNITRONIC FD CP (TP) plus - 4x2x0,75 mm² | m | |
|---|---|---|---|---|---|---|---|
| Target from | mm² | CORE | Core color | Target to: | | Page | Path |
| -X16U4.1:8/7 | 0.75 | 1 | wh | +CSP03-X116IP1:2 | | 304 | 6 |
| -X16U4.1:8/8 | 0.75 | 2 | bn | +CSP03-X116IP1:1 | | 304 | 6 |
| -X16U4.1:2/2 | 0.75 | 3 | gn | +CSP03-X116IP1:4 | | 304 | 4 |
| -X16U4.1:2/1 | 0,75 | 4 | ye | +CSP03-X116IP1:3 | | 304 | 4 |
| -X16U4.1:6/6 | 0.75 | 5 | gy | +CSP03-X116IP1:8 | | 304 | 5 |
| -X16U4.1:6/5 | 0.75 | 6 | pk | +CSP03-X116IP1:7 | | 304 | 5 |
| -X16U4.1:4/4 | 0.75 | 7 | bu | +CSP03-X116IP1:6 | | 304 | 5 |
| -X16U4.1:4/3 | 0,75 | 8 | rd | +CSP03-X116IP1:5 | | 304 | 5 |

| -WC22 | Junction box TBM1 - Saw up/down motor reslover | | | 759775000 | UNITRONIC FD CP (TP) plus - 4x2x0,75 mm² | m | |
|---|---|---|---|---|---|---|---|
| Target from | mm² | CORE | Core color | Target to: | | Page | Path |
| -X16U2.1:8/8 | 0.75 | 1 | wh | +TBM1-X16EM2:8/8 | | 302 | 6 |
| -X16U2.1:8/7 | 0.75 | 2 | bn | +TBM1-X16EM2:8/7 | | 302 | 6 |
| -X16U2.1:6/6 | 0.75 | 3 | gn | +TBM1-X16EM2:6/6 | | 302 | 5 |
| -X16U2.1:6/5 | 0,75 | 4 | ye | +TBM1-X16EM2:6/5 | | 302 | 5 |
| -X16U2.1:2/2 | 0.75 | 5 | gy | +TBM1-X16EM2:2/2 | | 302 | 4 |
| -X16U2.1:2/1 | 0.75 | 6 | pk | +TBM1-X16EM2:2/1 | | 302 | 4 |
| -X16U2.1:4/4 | 0.75 | 7 | bu | +TBM1-X16EM2:4/4 | | 302 | 5 |
| -X16U2.1:4/3 | 0,75 | 8 | rd | +TBM1-X16EM2:4/3 | | 302 | 5 |

| -WC23 | Junction box TBM1 - Saw in/out resolver | | | 759775000 | UNITRONIC FD CP (TP) plus - 4x2x0,75 mm² | m | |
|---|---|---|---|---|---|---|---|
| Target from | mm² | CORE | Core color | Target to: | | Page | Path |
| -X16U7.1:8/8 | 0.75 | 1 | wh | +TBM1-X16EM7:8/8 | | 305 | 6 |
| -X16U7.1:8/7 | 0.75 | 2 | bn | +TBM1-X16EM7:8/7 | | 305 | 6 |
| -X16U7.1:6/6 | 0.75 | 3 | gn | +TBM1-X16EM7:6/6 | | 305 | 5 |
| -X16U7.1:6/5 | 0,75 | 4 | ye | +TBM1-X16EM7:6/5 | | 305 | 5 |
| -X16U7.1:2/2 | 0.75 | 5 | gy | +TBM1-X16EM7:2/2 | | 305 | 4 |
| -X16U7.1:2/1 | 0.75 | 6 | pk | +TBM1-X16EM7:2/1 | | 305 | 4 |
| -X16U7.1:4/4 | 0.75 | 7 | bu | +TBM1-X16EM7:4/4 | | 305 | 5 |
| -X16U7.1:4/3 | 0,75 | 8 | rd | +TBM1-X16EM7:4/3 | | 305 | 5 |

=MSP6040

| -WC24 | Junction box TBM1 - Translation encoder | | | 759775000 | UNITRONIC FD CP (TP) plus - 4x2x0,75 mm² | m | |
|---|---|---|---|---|---|---|---|
| Target from | mm² | CORE | Core color | Target to: | | Page | Path |
| -X16U4.2:6/6 | 0.75 | 1 | wh | +TBM1-X16EM4:6/6 | | 304 | 8 |
| -X16U4.2:6/5 | 0.75 | 2 | bn | +TBM1-X16EM4:6/5 | | 304 | 8 |
| -X16U4.2:4/4 | 0.75 | 3 | gn | +TBM1-X16EM4:4/4 | | 304 | 7 |
| -X16U4.2:4/3 | 0,75 | 4 | ye | +TBM1-X16EM4:4/3 | | 304 | 7 |
| -X16U4.2:10/10 | 0.75 | 5 | gy | +TBM1-X16EM4:8/8 | | 304 | 9 |
| -X16U4.2:10/9 | 0.75 | 6 | pk | +TBM1-X16EM4:8/7 | | 304 | 8 |
| -X16U4.2:2/2 | 0.75 | 7 | bu | +TBM1-X16EM4:2/2 | | 304 | 7 |
| -X16U4.2:2/1 | 0,75 | 8 | rd | +TBM1-X16EM4:2/1 | | 304 | 7 |

| -WC25 | Junction box TBM3 - Back arm up/down motor resolver | | | 759775000 | UNITRONIC FD CP (TP) plus - 4x2x0,75 mm² | m | |
|---|---|---|---|---|---|---|---|
| Target from | mm² | CORE | Core color | Target to: | | Page | Path |
| -X16U3.1:8/8 | 0.75 | 1 | wh | +TBM3-X16EM3:8/8 | | 303 | 6 |
| -X16U3.1:8/7 | 0.75 | 2 | bn | +TBM3-X16EM3:8/7 | | 303 | 6 |
| -X16U3.1:6/6 | 0.75 | 3 | gn | +TBM3-X16EM3:6/6 | | 303 | 5 |
| -X16U3.1:6/5 | 0,75 | 4 | ye | +TBM3-X16EM3:6/5 | | 303 | 5 |
| -X16U3.1:2/2 | 0.75 | 5 | gy | +TBM3-X16EM3:2/2 | | 303 | 4 |
| -X16U3.1:2/1 | 0.75 | 6 | pk | +TBM3-X16EM3:2/1 | | 303 | 4 |
| -X16U3.1:4/4 | 0.75 | 7 | bu | +TBM3-X16EM3:4/4 | | 303 | 5 |
| -X16U3.1:4/3 | 0,75 | 8 | rd | +TBM3-X16EM3:4/3 | | 303 | 5 |

| -WC70 | Junction box TBM3 - Back arm up/down motor | | | 757102000 | OLFLEX CLASSIC 110 CY BLACK - 4G4 mm² | m | |
|---|---|---|---|---|---|---|---|
| Target from | mm² | CORE | Core color | Target to: | | Page | Path |
| -16U3:4 | 4 | 1 | bk | +TBM3-X16M3:1/U3 | | 303 | 2 |
| -16U3:5 | 4 | 2 | bk | +TBM3-X16M3:2/V3 | | 303 | 2 |
| -16U3:6 | 4 | 3 | bk | +TBM3-X16M3:3/W3 | | 303 | 2 |
| -16U3 | 4 | 4 | gnye | +TBM3-X16M3:4/PE | | 303 | 2 |

=MSP6040

| -WC70 | Junction box TBM3 - Back arm up/down motor | | | 757102000 | OLFLEX CLASSIC 110 CY BLACK - 4G4 mm² | m | |
|---|---|---|---|---|---|---|---|
| Target from | mm² | CORE | Core color | Target to: | | Page | Path |
| | 4 | 4 | gnye | | | | |

| -WC83 | Junction box TBM3 | | | 789102859 | OLFLEX CLASSIC 110 - 18G1 mm² | 7 m | |
|---|---|---|---|---|---|---|---|
| Target from | mm² | CORE | Core color | Target to: | | Page | Path |
| +TBM2-XCM8:17/1 | 1 | 1 | bk | +TBM3-XCM83:3/1 | | 604 | 5 |
| +TBM2-XCM8:17/2 | 1 | 2 | bk | +TBM3-XCM83:3/2 | | 604 | 5 |
| +TBM2-XCM8:17/17 | 1 | 3 | bk | +TBM3-XCM83:3/3 | | 604 | 5 |
| +TBM2-XCM8:18/18 | 1 | 4 | bk | +TBM3-XCM83:4/4 | | 604 | 6 |
| +TBM2-XCM8:19/19 | 1 | 5 | bk | +TBM3-XCM83:5/5 | | 604 | 7 |
| +TBM2-XCM8:20/20 | 1 | 6 | bk | +TBM3-XCM83:6/6 | | 604 | 8 |
| +TBM2-XCM9:9/9 | 1 | 7 | bk | +TBM3-XCM83:7/7 | | 607 | 5 |
| +TBM2-XCM9:10/10 | 1 | 8 | bk | +TBM3-XCM83:8/8 | | 607 | 6 |
| +TBM2-XCM9:11/11 | 1 | 9 | bk | +TBM3-XCM83:9/9 | | 607 | 7 |
| +TBM2-XCM9:12/12 | 1 | 10 | bk | +TBM3-XCM83:10/10 | | 607 | 8 |
| | 1 | 11 | bk | | | | |
| | 1 | 12 | bk | | | | |
| | 1 | 13 | bk | | | | |
| | 1 | 14 | bk | | | | |
| | 1 | 15 | bk | | | | |
| | 1 | 16 | bk | | | | |
| | 1 | 17 | bk | | | | |
| +TBM2-XCM9:18/PE | 1 | 18 | gnye | +TBM3-XCM83:18/PE | | 607 | 8 |

| -WETH1 | Customer ethernet | | | 757187000 | ETHERLINE Y FC - 2x2xAWG22/1 | m | |
|---|---|---|---|---|---|---|---|
| Target from | mm² | CORE | Core color | Target to: | | Page | Path |
| -16EWON1:P0 | 0.64 | 1 | ye | +CLIENT-ETH:E | | 600 | 0 |
| | 0.64 | 2 | og | | | | |
| | 0.64 | 3 | wh | | | | |
| | 0.64 | 4 | bu | | | | |

| -WETH2 | Control Panel - Ethernet | | | 757187000 | ETHERLINE Y FC - 2x2xAWG22/1 | m | |
|---|---|---|---|---|---|---|---|
| Target from | mm² | CORE | Core color | Target to: | | Page | Path |
| -16IM1:P3: | 0.64 | 1 | ye | +CP-16TP1:LAN | | 600 | 4 |
| | 0.64 | 2 | og | | | | |
| | 0.64 | 3 | wh | | | | |
| | 0.64 | 4 | bu | | | | |

| +BACK ARM UP/DOWN TROLLEY-W16B34 | Back arm YB Home | | | | | m | |
|---|---|---|---|---|---|---|---|
| Target from | mm² | CORE | Core color | Target to: | | Page | Path |
| -REP3:1 | | 1 | wh | -16B34:wh | | 604 | 6 |
| -REP3:4 | | 2 | bk | -16B34:bk | | 604 | 6 |

=MSP6040 +BACK ARM UP

| -W16B35 | Back arm in | | | | | m | |
|---|---|---|---|---|---|---|---|
| Target from | mm² | CORE | Core color | Target to: | | Page | Path |
| -REP3:1 | | 1 | wh | -16B35:wh | | 604 | 7 |
| -REP3:4 | | 2 | bk | -16B35:bk | | 604 | 7 |

| -W16Y0 | Gripping valve | | | | | m | |
|---|---|---|---|---|---|---|---|
| Target from | mm² | CORE | Core color | Target to: | | Page | Path |
| -REP3:3 | | 1 | bu | -16Y0:2 | | 607 | 5 |
| -REP3:4 | | 2 | bk | -16Y0:1 | | 607 | 5 |

| -W16Y1 | Ungripping valve | | | | | m | |
|---|---|---|---|---|---|---|---|
| Target from | mm² | CORE | Core color | Target to: | | Page | Path |
| -REP3:3 | | 1 | bu | -16Y1:2 | | 607 | 6 |
| -REP3:4 | | 2 | bk | -16Y1:1 | | 607 | 6 |

| -W16Y2 | Back pressure valve | | | | | m | |
|---|---|---|---|---|---|---|---|
| Target from | mm² | CORE | Core color | Target to: | | Page | Path |
| -REP3:3 | | 1 | bu | -16Y2:2 | | 607 | 7 |
| -REP3:4 | | 2 | bk | -16Y2:1 | | 607 | 7 |

| -W16Y3 | Back arm hot water | | | | | m | |
|---|---|---|---|---|---|---|---|
| Target from | mm² | CORE | Core color | Target to: | | Page | Path |
| -REP3:3 | | 1 | bu | -16Y3:2 | | 607 | 8 |
| -REP3:4 | | 2 | bk | -16Y3:1 | | 607 | 8 |

| +SAW UP/DOWN TROLLEY-W16B23 | Neck Detection Switch | | | | | m | |
|---|---|---|---|---|---|---|---|
| Target from | mm² | CORE | Core color | Target to: | | Page | Path |
| -REP2:1 | | 1 | bn | -16B23:bn | | 604 | 2 |
| -REP2:3 | | 2 | bu | -16B23:bu | | 604 | 2 |
| -REP2:4 | | 3 | bk | -16B23:bk | | 604 | 2 |

| +SAW UP/DOWN TROLLEY-W16B24 | Saw up/down Y-home | | | | | m | |
|---|---|---|---|---|---|---|---|
| Target from | mm² | CORE | Core color | Target to: | | Page | Path |
| -REP2:1 | | 1 | wh | -16B24:wh | | 604 | 3 |
| -REP2:4 | | 2 | bk | -16B24:bk | | 604 | 3 |

| +SAW UP/DOWN TROLLEY-W16B25 | Saw up/down Z-home | | | | | m | |
|---|---|---|---|---|---|---|---|
| Target from | mm² | CORE | Core color | Target to: | | Page | Path |
| -REP2:1 | | 1 | wh | -16B25:wh | | 604 | 4 |
| -REP2:4 | | 2 | bk | -16B25:bk | | 604 | 4 |

| +SAW UP/DOWN TROLLEY-W16Y6 | Saw hot water | | | | | m | |
|---|---|---|---|---|---|---|---|
| Target from | mm² | CORE | Core color | Target to: | | Page | Path |
| -REP2:3 | | 1 | bu | -16Y6:2 | | 607 | 1 |
| -REP2:4 | | 2 | bk | -16Y6:1 | | 607 | 1 |

=MSP6040 +SAW UP/DOWN

| -W16Y7 | Ham protection (Option) | | | | | m | |
|---|---|---|---|---|---|---|---|
| Target from | mm² | CORE | Core color | Target to: | | Page | Path |
| -REP2:3 | | 1 | bu | -16Y7:2 | | 607 | 2 |
| -REP2:4 | | 2 | bk | -16Y7:1 | | 607 | 2 |

| -W16Y26 | Telescopic beam 1 | | | | | m | |
|---|---|---|---|---|---|---|---|
| Target from | mm² | CORE | Core color | Target to: | | Page | Path |
| -REP2:3 | | 1 | bu | -16Y26:2 | | 607 | 3 |
| -REP2:4 | | 2 | bk | -16Y26:1 | | 607 | 3 |

| -W16Y27 | Telescopic beam 2 | | | | | m | |
|---|---|---|---|---|---|---|---|
| Target from | mm² | CORE | Core color | Target to: | | Page | Path |
| -REP2:3 | | 1 | bu | -16Y27:2 | | 607 | 4 |
| -REP2:4 | | 2 | bk | -16Y27:1 | | 607 | 4 |

# Materiallist

| Project (=) | Cabinet (+) | Page/Path | Component (-) | Marel articlenumber |
|---|---|---|---|---|
| =MSP6040 | | 100.1 | -100A1.1 | 744112000 |
| =MSP6040 | | 100.1 | -100A1.2 | 742756000 |
| =MSP6040 | | 100.1 | -100A1.2 | 757073000 |
| =MSP6040 | | 100.1 | -CSP | 759856800 |
| =MSP6040 | | 100.1 | -CSP | 759856690 |
| =MSP6040 | | 100.1 | -CSP | 744417000 |
| =MSP6040 | | 100.1 | -CSP | 759856760 |
| =MSP6040 | | 100.1 | -CSP | 5067112.001 |
| =MSP6040 | | 100.1 | -CSP | 759857020 |
| =MSP6040 | | 100.1 | -CSP | 759856840 |
| =MSP6040 | | 100.1 | -Q0 | 741767000 |
| =MSP6040 | | 100.1 | -Q0 | 745258000 |
| =MSP6040 | | 100.1 | -X0:1 | 759855800 |
| =MSP6040 | | 100.1 | -X0:5 | 759855830 |
| =MSP6040 | | 100.3 | -16F0 | 755967000 |
| =MSP6040 | | 100.6 | -16F0A | 755972000 |
| =MSP6040 | | 110.1 | -0VDC | 741436000 |
| =MSP6040 | | 110.1 | -F0A | 757394000 |
| =MSP6040 | | 110.1 | -U1 | 756169000 |
| =MSP6040 | | 120.1 | -Z1 | 756442000 |
| =MSP6040 | +CP | 210.2 | -CP1 | 744632000 |
| =MSP6040 | +CP | 210.2 | -CP1 | 741738000 |
| =MSP6040 | +CP | 210.2 | -CP1 | 741732000 |
| =MSP6040 | +CP | 210.2 | -CP1 | 741697000 |
| =MSP6040 | +CP | 210.2 | -CP1 | 741696000 |
| =MSP6040 | +CP | 210.2 | -ES1 | 756098000 |
| =MSP6040 | +CP | 210.2 | -ES1 | 756036000 |
| =MSP6040 | +CP | 210.2 | -ES1 | 756078000 |
| =MSP6040 | +CP | 210.2 | -ES1 | 756351000 |
| =MSP6040 | | 210.2 | -XES1:6 | 758883000 |

| Project (=) | Cabinet (+) | Page/Path | Component (-) | Marel articlenumber |
|---|---|---|---|---|
| =MSP6040 | | 210.3 | -XES2:2 | 758883000 |
| =MSP6040 | | 210.5 | -ESR1 | 756111000 |
| =MSP6040 | | 210.6 | -16ESK1 | 758000000 |
| =MSP6040 | | 210.7 | -16ESK2 | 758000000 |
| =MSP6040 | | 210.8 | -HL1 | 756036000 |
| =MSP6040 | | 210.8 | -HL1 | 756023000 |
| =MSP6040 | | 210.8 | -HL1 | 756031000 |
| =MSP6040 | | 210.9 | -HL2 | 756026000 |
| =MSP6040 | | 210.9 | -HL2 | 756035000 |
| =MSP6040 | | 210.9 | -HL2 | 756036000 |
| =MSP6040 | | 211.1 | -16ESQ1 | 759854410 |
| =MSP6040 | | 211.2 | -16ESQ2 | 759854410 |
| =MSP6040 | | 301.2 | -16F1 | 755968000 |
| =MSP6040 | | 301.3 | -16U1 | 758646000 |
| =MSP6040 | | 301.3 | -16U1 | 758671000 |
| =MSP6040 | | 301.4 | -16R1 | 749295000 |
| =MSP6040 | | 302.1 | -16BME2 | 747562000 |
| =MSP6040 | | 302.1 | -16F2A | 756943000 |
| =MSP6040 | | 302.1 | -X16U2:1 | 758879000 |
| =MSP6040 | | 302.1 | -X16U2:5 | 744112000 |
| =MSP6040 | | 302.2 | -16F2 | 755969000 |
| =MSP6040 | | 302.2 | -SH1 | 744113000 |
| =MSP6040 | | 302.2 | -SH1 | 741380000 |
| =MSP6040 | | 302.2 | -SH1 | 742756000 |
| =MSP6040 | | 302.3 | -16U2 | 757172000 |
| =MSP6040 | | 302.3 | -16U2 | 758646000 |
| =MSP6040 | | 302.3 | -16U2 | 758670000 |
| =MSP6040 | | 302.3 | -16U2 | 758675000 |
| =MSP6040 | | 302.4 | -16R2 | 758681000 |
| =MSP6040 | | 302.4 | -X16U2.1:2 | 758883000 |

# Materiallist

| Project (=) | Cabinet (+) | Page/Path | Component (-) | Marel articlenumber |
|---|---|---|---|---|
| =MSP6040 | | 302A.1 | -16KM2 | 757981000 |
| =MSP6040 | | 302A.2 | -16D2 | 742241000 |
| =MSP6040 | | 303.1 | -16BME3 | 747562000 |
| =MSP6040 | | 303.1 | -16F3A | 756943000 |
| =MSP6040 | | 303.1 | -X16U3:1 | 758879000 |
| =MSP6040 | | 303.1 | -X16U3:4 | 759270000 |
| =MSP6040 | | 303.1 | -X16U3:5 | 744112000 |
| =MSP6040 | | 303.2 | -16F3 | 755968000 |
| =MSP6040 | | 303.3 | -16U3 | 758675000 |
| =MSP6040 | | 303.3 | -16U3 | 757617000 |
| =MSP6040 | | 303.3 | -16U3 | 758646000 |
| =MSP6040 | | 303.4 | -16R3 | 749293000 |
| =MSP6040 | | 303.4 | -X16U3.1:2 | 758883000 |
| =MSP6040 | | 303A.1 | -16KM3 | 757981000 |
| =MSP6040 | | 303A.2 | -16D3 | 742241000 |
| =MSP6040 | | 304.2 | -16F4 | 755967000 |
| =MSP6040 | | 304.3 | -16U4 | 758677000 |
| =MSP6040 | | 304.3 | -16U4 | 758676000 |
| =MSP6040 | | 304.3 | -16U4 | 758669000 |
| =MSP6040 | | 304.3 | -16U4 | 758646000 |
| =MSP6040 | | 304.4 | -16R4 | 756321000 |
| =MSP6040 | | 304.4 | -X16U4.1:2 | 758883000 |
| =MSP6040 | | 304.7 | -X16U4.2:2 | 758883000 |
| =MSP6040 | | 305.2 | -16F7 | 755967000 |
| =MSP6040 | | 305.3 | -16U7 | 758667000 |
| =MSP6040 | | 305.3 | -16U7 | 758675000 |
| =MSP6040 | | 305.3 | -16U7 | 758646000 |
| =MSP6040 | | 305.4 | -16R7 | 742425000 |
| =MSP6040 | | 305.4 | -X16U7.1:2 | 758883000 |
| =MSP6040 | | 400.1 | -H1 | 759482000 |

| Project (=) | Cabinet (+) | Page/Path | Component (-) | Marel articlenumber |
|---|---|---|---|---|
| =MSP6040 | | 400.1 | -H1 | 759481000 |
| =MSP6040 | | 400.1 | -XEL:1 | 758879000 |
| =MSP6040 | | 400.3 | -FAN1 | 756168000 |
| =MSP6040 | | 400.3 | -FAN1 | 742362000 |
| =MSP6040 | +CLIENT | 600.0 | -ETH | 758480000 |
| =MSP6040 | +CLIENT | 600.0 | -ETH | 758478000 |
| =MSP6040 | | 600.1 | -16EWON1 | 741889000 |
| =MSP6040 | | 600.1 | -16EWON1 | 758083.000 |
| =MSP6040 | | 600.3 | -16IM1 | 757406.010 |
| =MSP6040 | | 600.3 | -16IM1 | 758478000 |
| =MSP6040 | | 600.3 | -16IM1 | 758480000 |
| =MSP6040 | | 600.3 | -16IM1 | 741889000 |
| =MSP6040 | | 600.3 | -16IM1 | 755574.020 |
| =MSP6040 | | 600.3 | -16IM1 | 758647000 |
| =MSP6040 | +CP | 600.6 | -16TP1 | 758478000 |
| =MSP6040 | +CP | 600.6 | -16TP1 | 758673000 |
| =MSP6040 | +CP | 600.6 | -16TP1 | 758480000 |
| =MSP6040 | +CP | 600.6 | -16TP1 | 759367000 |
| =MSP6040 | +CP | 600.6 | -XCP5:2 | 758883000 |
| =MSP6040 | +CP | 600.7 | -XCP5:2 | 758883000 |
| =MSP6040 | | 601.0 | -16PME04 | 755019000 |
| =MSP6040 | | 601.0 | -16PME04 | 747580000 |
| =MSP6040 | | 601.1 | -16DI05 | 758758000 |
| =MSP6040 | | 601.1 | -16DI05 | 741892000 |
| =MSP6040 | | 601.2 | -XA10:2 | 758883000 |
| =MSP6040 | | 601.3 | -XA11:2 | 758883000 |
| =MSP6040 | | 601.8 | -XC8:8 | 758883000 |
| =MSP6040 | | 602.1 | -16DI06 | 758758000 |
| =MSP6040 | | 602.1 | -16DI06 | 741892000 |
| =MSP6040 | +CP | 602.2 | -16SSH1 | 756036000 |

# Materiallist

| Project (=) | Cabinet (+) | Page/Path | Component (-) | Marel articlenumber |
|---|---|---|---|---|
| =MSP6040 | +CP | 602.2 | -16SSH1 | 756031000 |
| =MSP6040 | +CP | 602.2 | -16SSH1 | 759789000 |
| =MSP6040 | +CP | 602.2 | -16SSH1 | 756079000 |
| =MSP6040 | | 602.2 | -XC5:8 | 758883000 |
| =MSP6040 | +CP | 602.3 | -16BS2 | 756079000 |
| =MSP6040 | +CP | 602.3 | -16BS2 | 756036000 |
| =MSP6040 | +CP | 602.3 | -16BS2 | 756061000 |
| =MSP6040 | | 602.3 | -XC5:8 | 758883000 |
| =MSP6040 | +CP | 602.4 | -16BS3 | 756079000 |
| =MSP6040 | +CP | 602.4 | -16BS3 | 756036000 |
| =MSP6040 | +CP | 602.4 | -16BS3 | 756065000 |
| =MSP6040 | +CP | 602.5 | -16BSH4 | 756079000 |
| =MSP6040 | +CP | 602.5 | -16BSH4 | 756036000 |
| =MSP6040 | +CP | 602.5 | -16BSH4 | 756035000 |
| =MSP6040 | +CP | 602.5 | -16BSH4 | 756068000 |
| =MSP6040 | +CP | 602.6 | -16BSH5 | 756066000 |
| =MSP6040 | +CP | 602.6 | -16BSH5 | 756032000 |
| =MSP6040 | +CP | 602.6 | -16BSH5 | 756079000 |
| =MSP6040 | +CP | 602.6 | -16BSH5 | 756036000 |
| =MSP6040 | +CP | 602.7 | -16BSH6 | 756079000 |
| =MSP6040 | +CP | 602.7 | -16BSH6 | 756068000 |
| =MSP6040 | +CP | 602.7 | -16BSH6 | 756036000 |
| =MSP6040 | +CP | 602.7 | -16BSH6 | 756035000 |
| =MSP6040 | +CP | 602.8 | -16BSS7 | 756061000 |
| =MSP6040 | +CP | 602.8 | -16BSS7 | 756036000 |
| =MSP6040 | +CP | 602.8 | -16BSS7 | 756079000 |
| =MSP6040 | | 603.1 | -16DI07 | 741892000 |
| =MSP6040 | | 603.1 | -16DI07 | 758758000 |
| =MSP6040 | | 603.1 | -XC8:8 | 758883000 |
| =MSP6040 | +DRESSING LINE | 603.4 | -16BS10 | 741678000 |
| =MSP6040 | +DRESSING LINE | 603.4 | -16BS10 | 741625000 |
| =MSP6040 | +DRESSING LINE | 603.4 | -16BS10 | 756092000 |
| =MSP6040 | +DRESSING LINE | 603.4 | -16BS10 | 756091000 |
| =MSP6040 | +DRESSING LINE | 603.4 | -16BS10 | 756061000 |
| =MSP6040 | +DRESSING LINE | 603.4 | -16BS10 | 756081000 |
| =MSP6040 | | 604.1 | -16DI08 | 741892000 |
| =MSP6040 | | 604.1 | -16DI08 | 758758000 |
| =MSP6040 | | 605.1 | -16DO09 | 758759000 |
| =MSP6040 | | 605.1 | -16DO09 | 741892000 |
| =MSP6040 | | 605.1 | -16K0 | 747984000 |
| =MSP6040 | | 605.1 | -16K0 | 747981000 |
| =MSP6040 | | 605.2 | -16K1 | 747984000 |
| =MSP6040 | | 605.2 | -16K1 | 747981000 |
| =MSP6040 | | 605.3 | -16K2 | 747984000 |
| =MSP6040 | | 605.3 | -16K2 | 747981000 |
| =MSP6040 | | 605.4 | -16K3 | 747981000 |
| =MSP6040 | | 605.4 | -16K3 | 747984000 |
| =MSP6040 | | 605.5 | -XA12:1 | 758883000 |
| =MSP6040 | | 605.6 | -XC9:4 | 758883000 |
| =MSP6040 | | 605.7 | -XC9:4 | 758883000 |
| =MSP6040 | | 606.1 | -16DO10 | 741892000 |
| =MSP6040 | | 606.1 | -16DO10 | 758759000 |
| =MSP6040 | +CP | 606.4 | -16HL8 | 756036000 |
| =MSP6040 | +CP | 606.4 | -16HL8 | 756031000 |
| =MSP6040 | +CP | 606.4 | -16HL8 | 756023000 |
| =MSP6040 | | 607.1 | -16DO11 | 758759000 |
| =MSP6040 | | 607.1 | -16DO11 | 741892000 |

| Col | Page | Loc(+) | Fun(=) | MPS Art. | Art. Descr. |
|---|---|---|---|---|---|
| 1 | 100 | | | | CLIPFIX 35-5 |
| 1 | 100 | | =MSP6040 | 759855800 | PT POWER 35 |
| 1 | 100 | | =MSP6040 | 759855800 | PT POWER 35 |
| 1 | 100 | | =MSP6040 | 759855800 | PT POWER 35 |
| 1 | 100 | | =MSP6040 | 759855830 | PT POWER 35 -PE |
| | | | | | D-UKK3/5 |
| | | | | | CLIPFIX 35-5 |

=MSP6040

-X0

| Col | Page | Loc(+) | Fun(=) | MPS Art. | Art. Descr. |
|---|---|---|---|---|---|
| 1 | 302 | | | 758879000 | CLIPFIX 35-5 |
| 1 | 302 | | | 758879000 | PT 2,5 |
| 1 | 302 | | | 758879000 | PT 2,5 |
| | | | | | PT 2,5 |
| | | | | | D-ST 2,5 |
| | | | | | CLIPFIX 35-5 |

=MSP6040

-X16U2

←5001

5003→

| | | | | | |
|---|---|---|---|---|---|
| Start | 02-08-2019 | Engineer | WTH | Castrolanda | |
| Change | 28-08-2019 | Revision | V2.3 | Order Number: | LE632589 |
| Print Date | 10-10-2019 | Project | | Production Number: | 3765386 |

-X16U2

Project Description: Durand MSP 6040

CASCOL02

=MSP6040

Page: 5002

| Col | Page | Loc(+) | Fun(=) | MPS Art. | Art. Descr. |
|---|---|---|---|---|---|
| 4 | 302 | | =MSP6040 | 758883000 | CLIPFIX 35-5 |
| 5 | 302 | | =MSP6040 | 758883000 | PTTB 2,5 |
| 5 | 302 | | =MSP6040 | 758883000 | PTTB 2,5 |
| 6 | 302 | | =MSP6040 | 758883000 | PTTB 2,5 |
| | | | | | D-PTTB 2,5 |
| | | | | | CLIPFIX 35-5 |

=MSP6040

-X16U2.1

| Col | Page | Loc(+) | Fun(=) | MPS Art. | Art. Descr. |
|---|---|---|---|---|---|
| 1 | 303 | | | | CLIPFIX 35-5 |
| 1 | 303 | | | 758879000 | PT 2,5 |
| 1 | 303 | | | 758879000 | PT 2,5 |
| 1 | 303 | | | 758879000 | PT 2,5 |
| | | | | | D-ST 2,5 |
| | | | | | CLIPFIX 35-5 |

=MSP6040

-X16U3

←5003

5005→

| | | | | | | | |
|---|---|---|---|---|---|---|---|
| Start | 02-08-2019 | Engineer | WTH | Castrolanda | | -X16U3 | CASCOL02 |
| Change | 28-08-2019 | Revision | V2.3 | Order Number: | LE632589 | | Page: |
| Print Date | 10-10-2019 | Project | | Production Number: | 3765386 | Project Description: Durand MSP 6040 | =MSP6040 5004 |

| Col | Page | Loc(+) | Fun(=) | MPS Art. | Art. Descr. |
|---|---|---|---|---|---|
| 4 | 303 | | =MSP6040 | 758883000 | PTTB 2,5 |
| 5 | 303 | | =MSP6040 | 758883000 | PTTB 2,5 |
| 5 | 303 | | =MSP6040 | 758883000 | PTTB 2,5 |
| 6 | 303 | | =MSP6040 | 758883000 | PTTB 2,5<br>D-PTTB 2,5 |
| | | | | | CLIPFIX 35-5 |

=MSP6040

-X16U3.1

| Col | Page | Loc(+) | Fun(=) | MPS Art. | Art. Descr. |
|---|---|---|---|---|---|
| 4 | 304 | | =MSP6040 | 758883000 | CLIPFIX 35-5 |
| 5 | 304 | | =MSP6040 | 758883000 | PTTB 2,5 |
| 5 | 304 | | =MSP6040 | 758883000 | PTTB 2,5 |
| 6 | 304 | | =MSP6040 | 758883000 | PTTB 2,5 |
| | | | | | D-PTTB 2,5 |
| | | | | | CLIPFIX 35-5 |

=MSP6040

-X16U4.1

| Art. Descr. | MPS Art. | Fun(=) | Loc(+) | Page | Col |
|---|---|---|---|---|---|
| CLIPFIX 35-5 | | | | | |
| PTTB 2,5 | 758883000 | =MSP6040 | | 304 | 7 |
| PTTB 2,5 | 758883000 | =MSP6040 | | 304 | 7 |
| PTTB 2,5 | 758883000 | =MSP6040 | | 304 | 8 |
| PTTB 2,5 | 758883000 | =MSP6040 | | 304 | 8 |
| PTTB 2,5 D-PTTB 2,5 | 758883000 | =MSP6040 | | 304 | 8 |
| CLIPFIX 35-5 | | | | | |

=MSP6040

-X16U4.2

| Col | Page | Loc(+) | Fun(=) | MPS Art. | Art. Descr. |
|---|---|---|---|---|---|
| 4 | 305 | | =MSP6040 | 758883000 | CLIPFIX 35-5 |
| 5 | 305 | | =MSP6040 | 758883000 | PTTB 2,5 |
| 5 | 305 | | =MSP6040 | 758883000 | PTTB 2,5 |
| 6 | 305 | | =MSP6040 | 758883000 | PTTB 2,5 |
| | | | | | D-PTTB 2,5 |
| | | | | | CLIPFIX 35-5 |

=MSP6040

-X16U7.1

| Col | Page | Loc(+) | Fun(=) | MPS Art. | Art. Descr. |
|---|---|---|---|---|---|
| 2 | 601 | | =MSP6040 | 758883000 | CLIPFIX 35-5 |
| 2 | 605 | | =MSP6040 | 758883000 | PTTB 2,5 |
| 4 | 605 | | =MSP6040 | 758883000 | PTTB 2,5<br>D-PTTB 2,5<br>CLIPFIX 35-5 |

=MSP6040

-XA10

←5008

5010→

| | | | | | |
|---|---|---|---|---|---|
| Start | 02-08-2019 | Engineer | WTH | Castrolanda | |
| Change | 28-08-2019 | Revision | V2.3 | Order Number: | LE632589 |
| Print Date | 10-10-2019 | Project | | Production Number: | 3765386 |

-XA10

Project Description: Durand MSP 6040

CASCOL02

=MSP6040

Page: 5009

| Col | Page | Loc(+) | Fun(=) | MPS Art. | Art. Descr. |
|---|---|---|---|---|---|
| 3 | 601 | | =MSP6040 | 758883000 | CLIPFIX 35-5<br>PTTB 2,5<br>D-PTTB 2,5<br>CLIPFIX 35-5 |

=MSP6040

-XA11

| Col | Page | Loc(+) | Fun(=) | MPS Art. | Art. Descr. |
|---|---|---|---|---|---|
| 5 | 605 | | =MSP6040 | 758883000 | CLIPFIX 35-5<br>PTTB 2,5<br>D-PTTB 2,5<br>CLIPFIX 35-5 |

=MSP6040

-XA12

| Col | Page | Loc(+) | Fun(=) | MPS Art. | Art. Descr. |
|---|---|---|---|---|---|
| 5 | 120 | | =MSP6040 | 758883000 | CLIPFIX 35-5 |
| 2 | 210 | | =MSP6040 | 758883000 | PTTB 2,5 |
| 2 | 210 | | =MSP6040 | 758883000 | PTTB 2,5 |
| 2 | 602 | | =MSP6040 | 758883000 | PTTB 2,5 |
| 4 | 602 | | =MSP6040 | 758883000 | PTTB 2,5 |
| 6 | 602 | | =MSP6040 | 758883000 | PTTB 2,5 |
| 8 | 602 | | =MSP6040 | 758883000 | PTTB 2,5 |
| 2 | 606 | | =MSP6040 | 758883000 | PTTB 2,5 |
| 4 | 606 | | =MSP6040 | 758883000 | PTTB 2,5 |
| | | | | | D-PTTB 2,5 |
| | | | | | CLIPFIX 35-5 |

=MSP6040

-XC5

| Col | Page | Loc(+) | Fun(=) | MPS Art. | Art. Descr. |
|---|---|---|---|---|---|
| | | | | | CLIPFIX 35-5 |
| 6 | 120 | | =MSP6040 | 758883000 | PTTB 2,5 |
| 4 | 601 | | =MSP6040 | 758883000 | PTTB 2,5 |
| 6 | 601 | | =MSP6040 | 758883000 | PTTB 2,5 |
| 8 | 601 | | =MSP6040 | 758883000 | PTTB 2,5 |
| 2 | 603 | | =MSP6040 | 758883000 | PTTB 2,5 |
| 4 | 603 | | =MSP6040 | 758883000 | PTTB 2,5 |
| 1 | 604 | | =MSP6040 | 758883000 | PTTB 2,5 |
| 3 | 604 | | =MSP6040 | 758883000 | PTTB 2,5 |
| 5 | 604 | | =MSP6040 | 758883000 | PTTB 2,5 |
| 7 | 604 | | =MSP6040 | 758883000 | PTTB 2,5<br>D-PTTB 2,5<br>CLIPFIX 35-5 |

=MSP6040

-XC8

| Col | Page | Loc(+) | Fun(=) | MPS Art. | Art. Descr. |
|---|---|---|---|---|---|
| 7 | 120 | | =MSP6040 | 758883000 | PTTB 2,5 |
| 6 | 605 | | =MSP6040 | 758883000 | PTTB 2,5 |
| 1 | 607 | | =MSP6040 | 758883000 | PTTB 2,5 |
| 3 | 607 | | =MSP6040 | 758883000 | PTTB 2,5 |
| 5 | 607 | | =MSP6040 | 758883000 | PTTB 2,5 |
| 7 | 607 | | =MSP6040 | 758883000 | PTTB 2,5 |
| | | | | | D-PTTB 2,5 |
| | | | | | CLIPFIX 35-5 |

=MSP6040

-XC9

←5013

5015→

| | | | | | |
|---|---|---|---|---|---|
| Start | 02-08-2019 | Engineer | WTH | Castrolanda | |
| Change | 28-08-2019 | Revision | V2.3 | Order Number: | LE632589 |
| Print Date | 10-10-2019 | Project | | Production Number: | 3765386 |

-XC9

Project Description: Durand MSP 6040

CASCOL02

=MSP6040

Page: 5014

| Art. Descr. | MPS Art. | Fun(=) | Loc(+) | Page | Col |
|---|---|---|---|---|---|
| CLIPFIX 35-5 | | | | | |
| PTTB 2,5 | 758883000 | =MSP6040 | | 210 | 2 |
| PTTB 2,5 | 758883000 | =MSP6040 | | 210 | 2 |
| PTTB 2,5 | 758883000 | =MSP6040 | | 210 | 2 |
| PTTB 2,5<br>D-PTTB 2,5 | 758883000 | =MSP6040 | | 210 | 2 |
| CLIPFIX 35-5 | | | | | |

=MSP6040

-XES1

←5014

5016→

| | | | | | |
|---|---|---|---|---|---|
| Start | 02-08-2019 | Engineer | WTH | Castrolanda | |
| Change | 28-08-2019 | Revision | V2.3 | Order Number: | LE632589 |
| Print Date | 10-10-2019 | Project | | Production Number: | 3765386 |

-XES1

Project Description: Durand MSP 6040

CASCOL02

=MSP6040

Page: 5015

| Col | Page | Loc(+) | Fun(=) | MPS Art. | Art. Descr. |
|---|---|---|---|---|---|
| 3 | 210 | | =MSP6040 | 758883000 | CLIPFIX 35-5 |
| 3 | 210 | | =MSP6040 | 758883000 | PTTB 2,5 |
| 4 | 210 | | =MSP6040 | 758883000 | PTTB 2,5 |
| | | | | | PTTB 2,5 |
| | | | | | D-PTTB 2,5 |
| | | | | | CLIPFIX 35-5 |

=MSP6040

-XES2

| Col | Page | Loc(+) | Fun(=) | MPS Art. | Art. Descr. |
|---|---|---|---|---|---|
| 6 | 600 | | =MSP6040 | 758883000 | CLIPFIX 35-5 |
| 2 | 210 | | =MSP6040 | 758883000 | PTTB 2,5 |
| 2 | 210 | | =MSP6040 | 758883000 | PTTB 2,5 |
| 2 | 602 | | =MSP6040 | 758883000 | PTTB 2,5 |
| 4 | 602 | | =MSP6040 | 758883000 | PTTB 2,5 |
| 6 | 602 | | =MSP6040 | 758883000 | PTTB 2,5 |
| 8 | 602 | | =MSP6040 | 758883000 | PTTB 2,5 |
| 2 | 606 | | =MSP6040 | 758883000 | PTTB 2,5 |
| 4 | 606 | | =MSP6040 | 758883000 | PTTB 2,5 |
| | | | | | D-PTTB 2,5 |
| | | | | | CLIPFIX 35-5 |

=MSP6040
+CP
-XCP5

←=MSP6040/5016

| | | | | | |
|---|---|---|---|---|---|
| Start | 02-08-2019 | Engineer | WTH | Castrolanda | |
| Change | 28-08-2019 | Revision | V2.3 | Order Number: | LE632589 |
| Print Date | 10-10-2019 | Project | | Production Number: | 3765386 |

-XCP5

Project Description: Durand MSP 6040

CASCOL02

+CP =MSP6040 Page: 5017

# Cable list

| Func.(=) | Loc.(+) | Cable | Description | Article | Code | Cable type | Length | From | To | Pag. |
|---|---|---|---|---|---|---|---|---|---|---|
| =MSP6040 | | -WC1 | Power supply | | | | | =MSP6040-X0 | =MSP6040-CSP | 100 |
| =MSP6040 | | -WC5 | Control Panel | 789102859 | FNN | OLFLEX CLASSIC 110 - 18G1 mm² | | =MSP6040-XC5 | =MSP6040+CP-XCP5 | 120 |
| =MSP6040 | | -WC8 | Junction box TBM2 - cable 1 | 746788000 | FNN | OLFLEX CLASSIC 110 - 25G1 mm² | | =MSP6040-XC8 | =MSP6040+TBM2-XCM8 | 120 |
| =MSP6040 | | -WC9 | Junction box TBM2 - cable 2 | 789102859 | FNN | OLFLEX CLASSIC 110 - 18G1 mm² | | =MSP6040-XC9 | =MSP6040+TBM2-XCM9 | 120 |
| =MSP6040 | | -W16M1 | Saw motor | 755344000 | FCS | OLFLEX SERVO FD 796CP - 4G2,5 mm² | 7 | =MSP6040+TBM1-X16M1 | =MSP6040-16M1 | 301 |
| =MSP6040 | | -WC6 | Junction box TBM1 - Saw motor | 757101000 | FCF | OLFLEX CLASSIC 110 CY BLACK - 4G2,5 mm² | | =MSP6040-16U1 | =MSP6040+TBM1-X16M1 | 301 |
| =MSP6040 | | -W16M2 | Saw up/down motor | 758630000 | FCS | OLFLEX SERVO FD 796CP - 4G6 mm² | 7 | =MSP6040+TBM1-X16M2 | =MSP6040-16M2 | 302 |
| =MSP6040 | | -W16MBY2 | Saw up/down motor brake | 755344000 | FCS | OLFLEX SERVO FD 796CP - 4G2,5 mm² | 7 | =MSP6040+TBM1-X16M2 | =MSP6040-16MBY2 | 302 |
| =MSP6040 | | -W16RES2 | Saw up/down motor resolver | 746754000 | ECT | UNITRONIC FD CP (TP) plus - 4x2x0,5 mm² | 7 | =MSP6040+TBM1-X16EM2 | =MSP6040-16RES2 | 302 |
| =MSP6040 | | -WC2 | Junction box TBM1 - Saw up/down motor brake | 757101000 | FCF | OLFLEX CLASSIC 110 CY BLACK - 4G2,5 mm² | | =MSP6040-X16U2 | =MSP6040+TBM1-X16M2 | 302 |
| =MSP6040 | | -WC7 | Junction box TBM1 - Saw up/down motor | 757103000 | FCF | OLFLEX CLASSIC 110 CY BLACK - 4G6 mm² | | =MSP6040-16U2 | =MSP6040+TBM1-X16M2 | 302 |
| =MSP6040 | | -WC22 | Junction box TBM1 - Saw up/down motor reslover | 759775000 | ECT | UNITRONIC FD CP (TP) plus - 4x2x0,75 mm² | | =MSP6040-X16U2.1 | =MSP6040+TBM1-X16EM2 | 302 |
| =MSP6040 | | -W16M3 | Back arm up/down motor | 758487000 | FCS | OLFLEX SERVO FD 796CP - 4G4 mm² | 10 | =MSP6040+TBM3-X16M3 | =MSP6040-16M3 | 303 |
| =MSP6040 | | -W16MBY3 | Back arm up/down motor brake | 755344000 | FCS | OLFLEX SERVO FD 796CP - 4G2,5 mm² | 7 | =MSP6040+TBM3-X16M3 | =MSP6040-16MBY3 | 303 |
| =MSP6040 | | -W16RES3 | Back arm up/down motor resolver | 746754000 | ECT | UNITRONIC FD CP (TP) plus - 4x2x0,5 mm² | 10 | =MSP6040+TBM3-X16EM3 | =MSP6040-16RES3 | 303 |
| =MSP6040 | | -WC17 | Junction box TBM3 - Back arm up/down motor brake | 757101000 | FCF | OLFLEX CLASSIC 110 CY BLACK - 4G2,5 mm² | | =MSP6040-X16U3 | =MSP6040+TBM3-X16M3 | 303 |
| =MSP6040 | | -WC25 | Junction box TBM3 - Back arm up/down motor resolver | 759775000 | ECT | UNITRONIC FD CP (TP) plus - 4x2x0,75 mm² | | =MSP6040-X16U3.1 | =MSP6040+TBM3-X16EM3 | 303 |
| =MSP6040 | | -WC70 | Junction box TBM3 - Back arm up/down motor | 757102000 | FCF | OLFLEX CLASSIC 110 CY BLACK - 4G4 mm² | | =MSP6040-16U3 | =MSP6040+TBM3-X16M3 | 303 |
| =MSP6040 | | -W16M4 | Saw side up motor | 755344000 | FCS | OLFLEX SERVO FD 796CP - 4G2,5 mm² | 7 | =MSP6040+TBM1-X16M4 | =MSP6040-16M4 | 304 |
| =MSP6040 | | -W16M5 | Saw side down motor | 755344000 | FCS | OLFLEX SERVO FD 796CP - 4G2,5 mm² | 7 | =MSP6040+TBM1-X16M4 | =MSP6040-16M5 | 304 |
| =MSP6040 | | -W16M6 | Back arm motor | 755344000 | FCS | OLFLEX SERVO FD 796CP - 4G2,5 mm² | 7 | =MSP6040+TBM1-X16M4 | =MSP6040-16M6 | 304 |
| =MSP6040 | | -W16RES4 | Translation encoder | 746754000 | ECT | UNITRONIC FD CP (TP) plus - 4x2x0,5 mm² | 7 | =MSP6040+TBM1-X16EM4 | =MSP6040-16RES4 | 304 |
| =MSP6040 | | -WC4 | Junction box TBM1 - Translation motors | 757101000 | FCF | OLFLEX CLASSIC 110 CY BLACK - 4G2,5 mm² | | =MSP6040-16U4 | =MSP6040+TBM1-X16M4 | 304 |
| =MSP6040 | | -WC20 | Junction box TBM4 - Encoder Dressing Line | 759775000 | ECT | UNITRONIC FD CP (TP) plus - 4x2x0,75 mm² | | =MSP6040-X16U4.1 | =MSP6040+CSP03-X11 | 801 |
| =MSP6040 | | -WC24 | Junction box TBM1 - Translation encoder | 759775000 | ECT | UNITRONIC FD CP (TP) plus - 4x2x0,75 mm² | | =MSP6040-X16U4.2 | =MSP6040+TBM1-X16EM4 | 304 |
| =MSP6040 | | -W16M7 | Head in/out motor | 755344000 | FCS | OLFLEX SERVO FD 796CP - 4G2,5 mm² | 7 | =MSP6040+TBM1-X16M7 | =MSP6040-16M7 | 305 |
| =MSP6040 | | -W16RES7 | Saw in/out resolver | 746754000 | ECT | UNITRONIC FD CP (TP) plus - 4x2x0,5 mm² | 7 | =MSP6040+TBM1-X16EM7 | =MSP6040-16RES7 | 305 |
| =MSP6040 | | -WC3 | Junction box TBM1 - Head in/out motor | 757101000 | FCF | OLFLEX CLASSIC 110 CY BLACK - 4G2,5 mm² | | =MSP6040-16U7 | =MSP6040+TBM1-X16M7 | 305 |
| =MSP6040 | | -WC23 | Junction box TBM1 - Saw in/out resolver | 759775000 | ECT | UNITRONIC FD CP (TP) plus - 4x2x0,75 mm² | | =MSP6040-X16U7.1 | =MSP6040+TBM1-X16EM7 | 305 |
| =MSP6040 | | -WETH1 | Customer ethernet | 757187000 | MCDE | ETHERLINE Y FC - 2x2xAWG22/1 | | =MSP6040-16EWON1 | =MSP6040+CLIENT-ETH | 600 |
| =MSP6040 | | -WETH2 | Control Panel - Ethernet | 757187000 | MCDE | ETHERLINE Y FC - 2x2xAWG22/1 | | =MSP6040-16IM1 | =MSP6040+CP-16TP1 | 600 |

# Cable list

| Func.(=) | Loc.(+) | Cable | Description | Article | Code | Cable type | Length | From | To | Pag. |
|---|---|---|---|---|---|---|---|---|---|---|
| =MSP6040 | | -W16B20 | X home | | | | | =MSP6040+TBM2-XCM8 | =MSP6040+MACHINE FRAME | 6001 |
| =MSP6040 | | -W16B21 | X End switch | | | | | =MSP6040+TBM2-XCM8 | =MSP6040+MACHINE FRAME | 6001 |
| =MSP6040 | | -W16PB4 | Air pressure OK | | | | | =MSP6040+TBM2-XCM8 | =MSP6040+MACHINE FRAME | 6001 |
| =MSP6040 | | -WC10 | Dressing line information and on/off control | 789102857 | FNN | OLFLEX CLASSIC 110 - 7G1 mm² | | =MSP6040-XA10 | =MSP6040+DRESSING LINE-X | 6001 |
| =MSP6040 | | -WC11 | Downstream machine | 746799000 | FNN | OLFLEX CLASSIC 110 - 3G1 mm² | | =MSP6040-XA11 | =MSP6040+DOWNSTREAM-X | 6001 |
| =MSP6040 | | -W16BS10 | Saw side PB skip hog | | | | | =MSP6040+TBM2-XCM8 | =MSP6040+DRESSING LINE | 6003 |
| =MSP6040 | | -W16FR1 | Saw side Measurement laser - receiver | | | | | =MSP6040+TBM2-XCM8 | =MSP6040+SAW SIDE FRAME | 6003 |
| =MSP6040 | | -W16LS0 | Saw side Hook 1 (If hookline) | | | | | =MSP6040+TBM2-XCM8 | =MSP6040+DRESSING LINE | 6003 |
| =MSP6040 | | -W16LS1 | Saw side Hook 2 (If hookline) gambrel limit switch | | | | | =MSP6040+TBM2-XCM8 | =MSP6040+DRESSING LINE | 6003 |
| =MSP6040 | | -W16LS2 | Saw side Conveyor pitch | | | | | =MSP6040+TBM2-XCM8 | =MSP6040+DRESSING LINE | 6003 |
| =MSP6040 | | -W16FT1 | Saw side Measurement laser - transmitter | | | | | =MSP6040+TBM3-XCM83 | =MSP6040+BACK ARM FRAME | 6004 |
| =MSP6040 | | -W16REP2 | Distribution block REP2 - Saw up/down trolley | | | | | =MSP6040+TBM2-XCM8 | =MSP6040+SAW UP/DOWN CONTROLLE | 6004 |
| =MSP6040 | | -W16REP3 | Distribution block REP3 - Arm up/down trolley | | | | | =MSP6040+TBM3-XCM83 | =MSP6040+BACK ARM UP/DOWN T | 6004 |
| =MSP6040 | | -WC83 | Junction box TBM3 | 789102859 | FNN | OLFLEX CLASSIC 110 - 18G1 mm² | 7 | =MSP6040+TBM2-XCM8 | =MSP6040+TBM3-XCM83 | 6004 |
| =MSP6040 | | -W16Y4 | Main air valve | | | | | =MSP6040+TBM2-XCM9 | =MSP6040+MACHINE FRAME | 6005 |
| =MSP6040 | | -W16Y5 | Saw cold water | | | | | =MSP6040+TBM2-XCM9 | =MSP6040+MACHINE FRAME | 6005 |
| =MSP6040 | | -WC12 | Upstream machine | 746799000 | FNN | OLFLEX CLASSIC 110 - 3G1 mm² | | =MSP6040-XA12 | =MSP6040+UPSTREAM-X | 6005 |
| =MSP6040 | +BACK ARM | -WP1/6B34 | Back arm YB Home | | | | | =MSP6040+BACK ARM UP/DOWN TROLLEY | =MSP6040+BACK ARM UP/DOWN T | 6006 |
| =MSP6040 | +BACK ARM | -WP1/6B35 | Back arm in | | | | | =MSP6040+BACK ARM UP/DOWN TROLLEY | =MSP6040+BACK ARM UP/DOWN T | 6006 |
| =MSP6040 | +BACK ARM | -WP1/6Y00 | Gripping valve | | | | | =MSP6040+BACK ARM UP/DOWN TROLLEY | =MSP6040+BACK ARM UP/DOWN T | 6007 |
| =MSP6040 | +BACK ARM | -WP1/6Y01 | Ungripping valve | | | | | =MSP6040+BACK ARM UP/DOWN TROLLEY | =MSP6040+BACK ARM UP/DOWN T | 6007 |
| =MSP6040 | +BACK ARM | -WP1/6Y02 | Back pressure valve | | | | | =MSP6040+BACK ARM UP/DOWN TROLLEY | =MSP6040+BACK ARM UP/DOWN T | 6007 |
| =MSP6040 | +BACK ARM | -WP1/6Y03 | Back arm hot water | | | | | =MSP6040+BACK ARM UP/DOWN TROLLEY | =MSP6040+BACK ARM UP/DOWN T | 6007 |
| =MSP6040 | +SAW UP/DOWN | -WP1/6B20 | Neck Detection Switch | | | | | =MSP6040+SAW UP/DOWN TROLLEY | =MSP6040+SAW UP/DOWN CONTROLLE | 6004 |
| =MSP6040 | +SAW UP/DOWN | -WP1/6B24 | Saw up/down Y-home | | | | | =MSP6040+SAW UP/DOWN TROLLEY | =MSP6040+SAW UP/DOWN CONTROLLE | 6004 |
| =MSP6040 | +SAW UP/DOWN | -WP1/6B25 | Saw up/down Z-home | | | | | =MSP6040+SAW UP/DOWN TROLLEY | =MSP6040+SAW UP/DOWN CONTROLLE | 6004 |
| =MSP6040 | +SAW UP/DOWN | -WP1/6Y16 | Saw hot water | | | | | =MSP6040+SAW UP/DOWN TROLLEY | =MSP6040+SAW UP/DOWN CONTROLLE | 6007 |
| =MSP6040 | +SAW UP/DOWN | -WP1/6Y17 | Ham protection (Option) | | | | | =MSP6040+SAW UP/DOWN TROLLEY | =MSP6040+SAW UP/DOWN CONTROLLE | 6007 |
| =MSP6040 | +SAW UP/DOWN | -WP1/6Y26 | Telescopic beam 1 | | | | | =MSP6040+SAW UP/DOWN TROLLEY | =MSP6040+SAW UP/DOWN CONTROLLE | 6007 |
| =MSP6040 | +SAW UP/DOWN | -WP1/6Y27 | Telescopic beam 2 | | | | | =MSP6040+SAW UP/DOWN TROLLEY | =MSP6040+SAW UP/DOWN CONTROLLE | 6007 |